TETON

CS BUILD

2008.01.14

DATE	CHANGE NO.	REV

	EE	DATE	POWER	DATE
DRAWER				
DESIGN				
CHECK				
RESPONSIBLE				

SIZE = 3 VER :

FILE NAME : XXXX-XXXXXX-XX

P/N XXXXXXXXXXXX

INVENTEC

TITLE *TETON*

SIZE	CODE	DOC. NUMBER	REV
A3	CS	*Model_No*	*AX1*

SHEET 1 OF 54

TABLE OF CONTENTS

PAGE

MAINBOARD

1.COVER PAGE
2.INDEX
3.BLOCK DIAGRAM
4.POWER SEQUENCE BLOCK
5-12.SYSTEM POWER
13.CLOCK GENERATOR
14-17.CPU Merom
18.FAN & THERMAL CONTROLLER
19-25.N/B Crestline
26.DDR2 DIMM0
27.DDR2 DIMM1
28.DDR DAMPING
29.MXM CONN
30.CRT CONN
31.HDMI & DP CONN
32.LCD CONN
33-37.S/B ICH8M
38.LAN CONTROLLER
39.RJ45 CONN
40.MINI CARD

PAGE

41.SATA HDD&ODD
42.USB CONN
43.BLUE TOOTH & MDC CONN
44.KBC
45.AUDIO CODEC
46.AUDIO JACK
47.AUDIO AMP
48.AUDIO AMP & SPK CONN
49.SCREW
50.MB TO OTHER B CONN
51.USB BOARD
52.POWER BUTTON BOARD
53.TP BUTTON BOARD
54.HINGE LED BOARD 1 & 2

PAGE

I/O BOARD

1.EXPRESS CARD CONN
2.CARD READER CONTROLLER

HOTKEY BOARD

1.HOTKEY BOARD

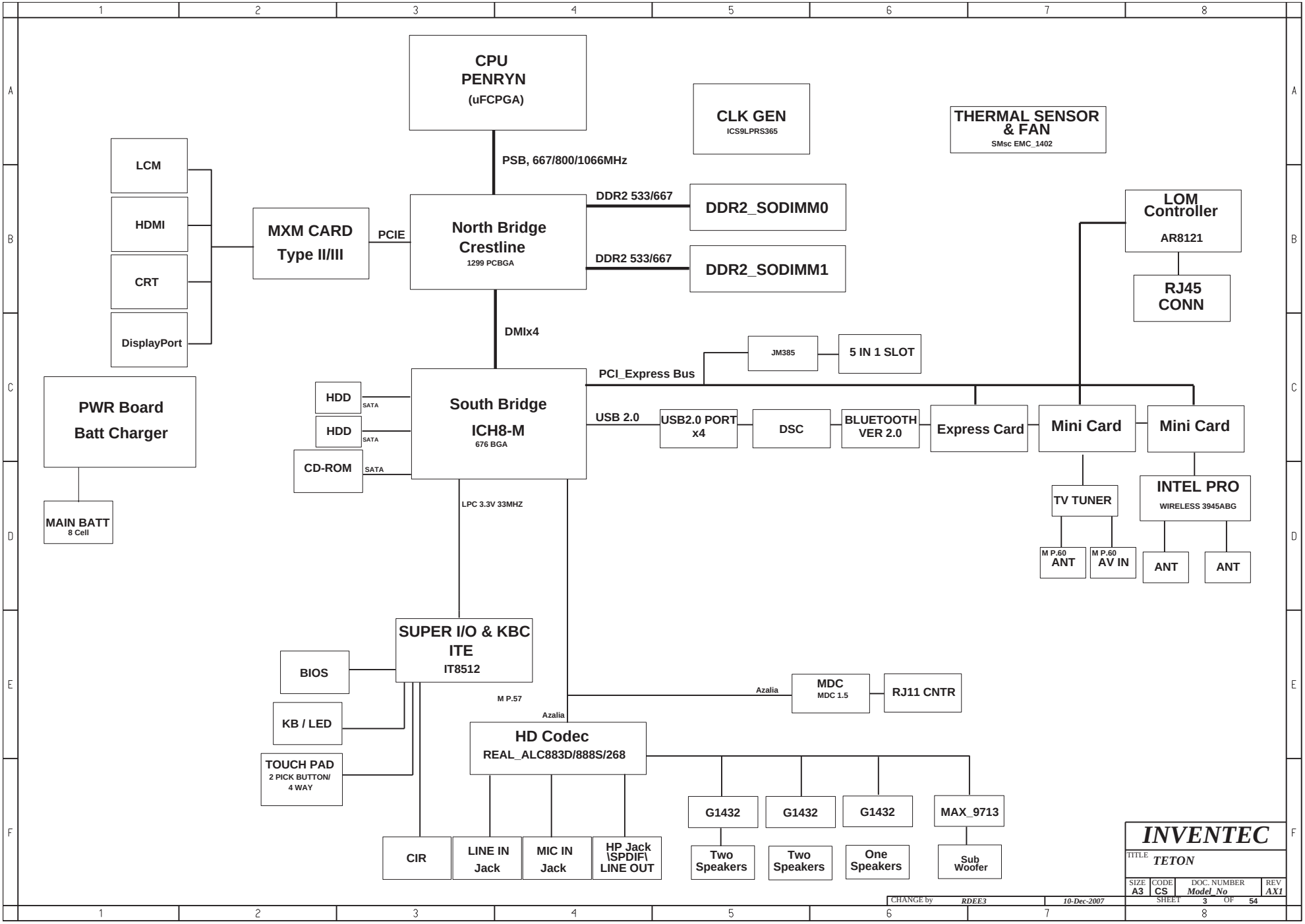
CPU
PENRYN
(uFCPGA)
CLK GEN
ICS9LPRS365
THERMAL SENSOR & FAN
SMsc EMC_1402
PSB, 667/800/1066MHz
LCM
HDMI
CRT
DisplayPort
MXM CARD
Type II/III
PCIE
North Bridge
Crestline
1299 PCBGA
DDR2 533/667
DDR2_SODIMM0
DDR2 533/667
DDR2_SODIMM1
LOM Controller
AR8121
RJ45 CONN
DMIx4
JM385
5 IN 1 SLOT
PCI_Express Bus
PWR Board
Batt Charger
HDD
SATA
HDD
SATA
CD-ROM
SATA
South Bridge
ICH8-M
676 BGA
USB 2.0
USB2.0 PORT x4
DSC
BLUETOOTH VER 2.0
Express Card
Mini Card
Mini Card
TV TUNER
INTEL PRO
WIRELESS 3945ABG
M P.60
ANT
M P.60
AV IN
ANT
ANT
MAIN BATT
8 Cell
LPC 3.3V 33MHZ
SUPER I/O & KBC
ITE
IT8512
BIOS
KB / LED
TOUCH PAD
2 PICK BUTTON/
4 WAY
M P.57
Azalia
MDC
MDC 1.5
RJ11 CNTR
Azalia
HD Codec
REAL_ALC883D/888S/268
G1432
G1432
G1432
MAX_9713
Two Speakers
Two Speakers
One Speakers
Sub Woofer
CIR
LINE IN Jack
MIC IN Jack
HP Jack \SPDIF\ LINE OUT
INVENTEC
TITLE TETON
SIZE A3
CODE CS
DOC. NUMBER Model_No
REV AX1
CHANGE by RDEE3
10-Dec-2007
SHEET 3 OF 54

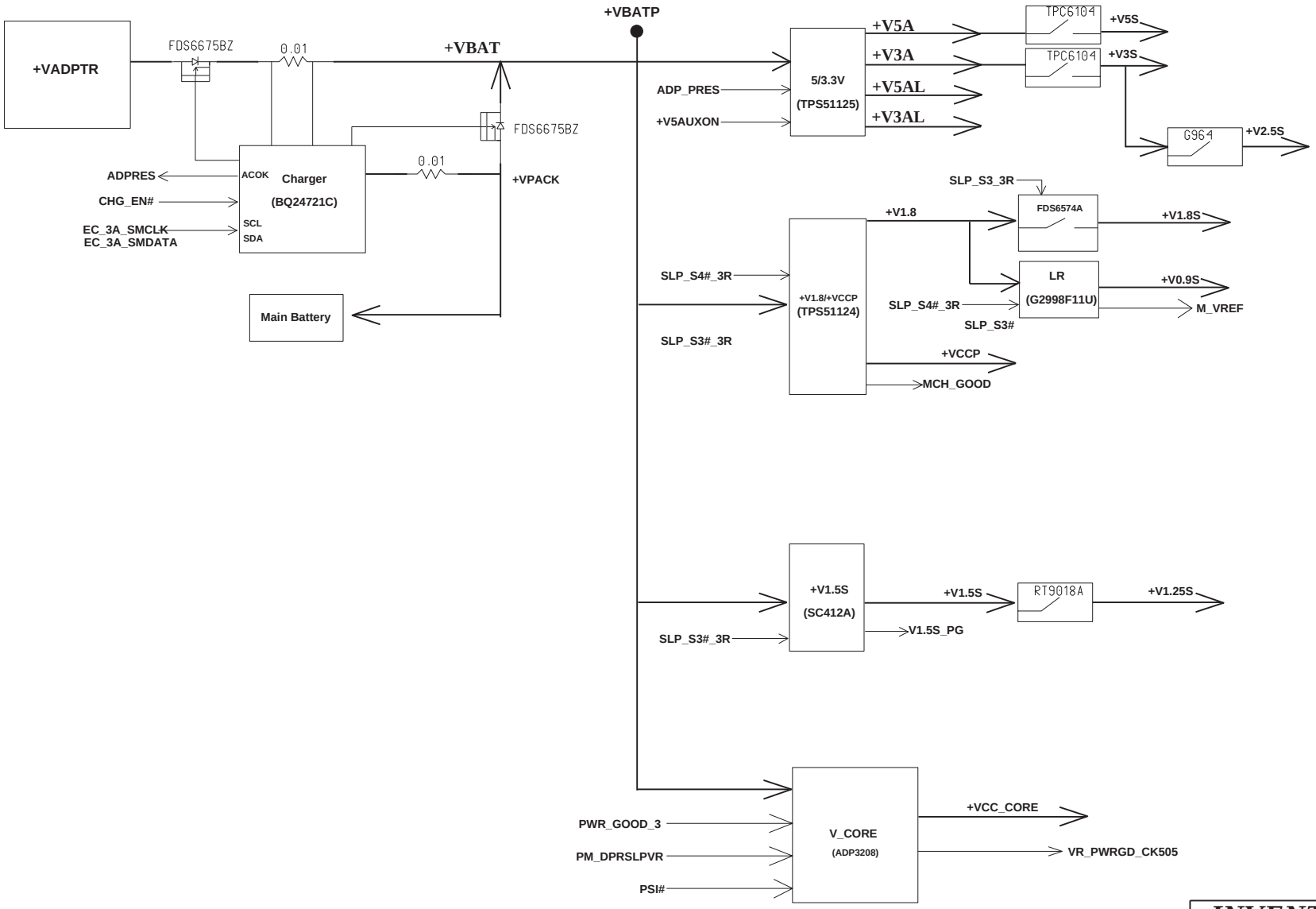

INVENTEC

TITLE TETON

SIZE	CODE	DOC. NUMBER	REV
A3	CS	Model_No	AX1

CHANGE by RDEE3 13-Jan-2008

SHEET 4 OF 54

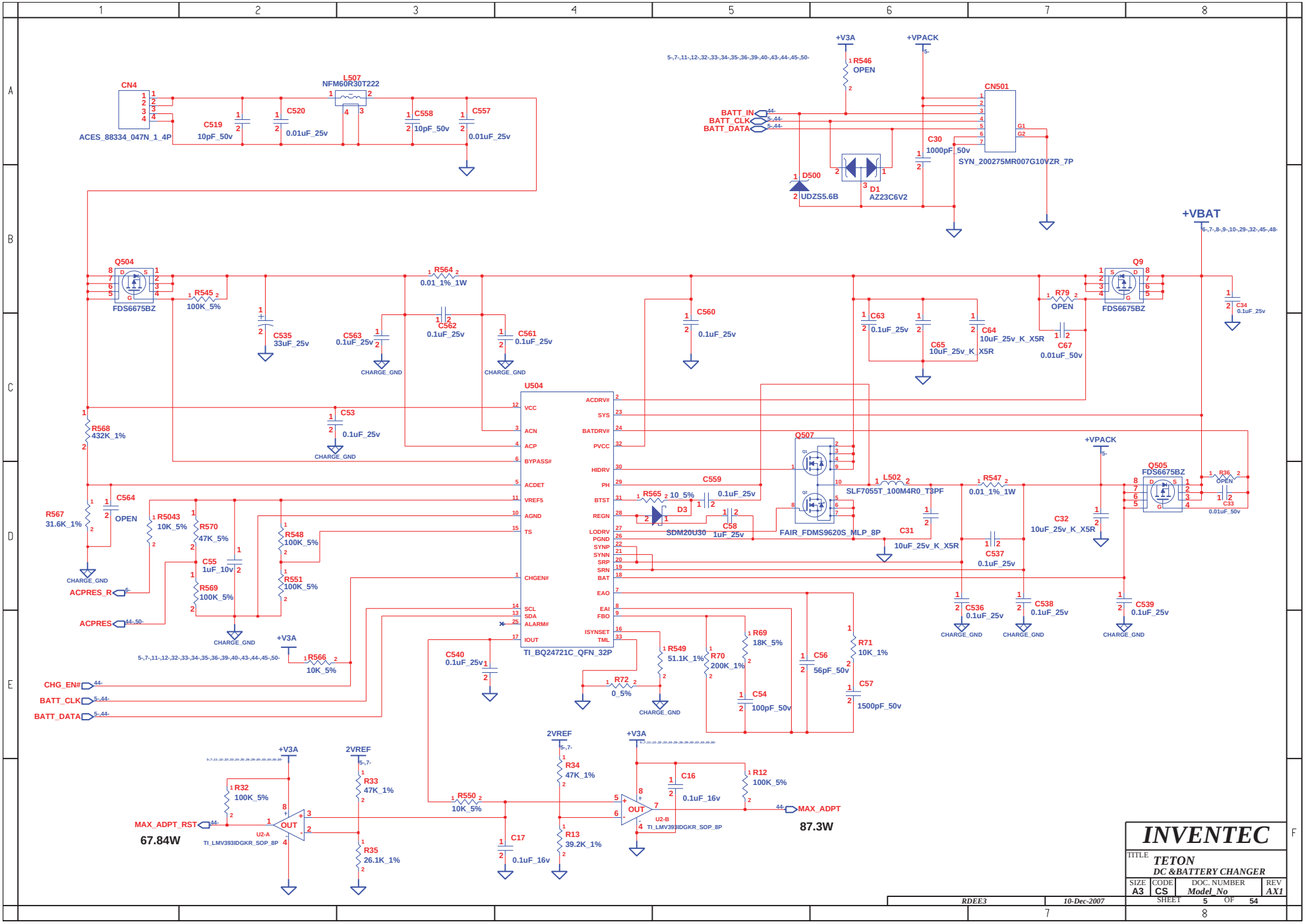
CN4
ACES_88334_047N_1_4P
L507
NFM60R30T222
C519
10pF_50v
C520
0.01uF_25v
C558
10pF_50v
C557
0.01uF_25v
+V3A
+VPACK
R546
OPEN
CN501
SYN_200275MR007G10VZR_7P
BATT_IN
BATT_CLK
BATT_DATA
C30
1000pF_50v
D500
UDZS5.6B
D1
AZ23C6V2
+VBAT
Q504
FDS6675BZ
R545
100K_5%
C535
33uF_25v
R564
0.01_1%_1W
C563
0.1uF_25v
C562
0.1uF_25v
C561
0.1uF_25v
CHARGE_GND
C560
0.1uF_25v
C63
0.1uF_25v
C65
10uF_25v_K_X5R
C64
10uF_25v_K_X5R
R79
OPEN
C67
0.01uF_50v
Q9
FDS6675BZ
C34
0.1uF_25v
U504
TI_BQ24721C_QFN_32P
VCC
ACN
ACP
BYPASS#
ACDET
VREF5
AGND
TS
CHGEN#
SCL
SDA
ALARM#
IOUT
ACDRV#
SYS
BATDRV#
PVCC
HIDRV
PH
BTST
REGN
LODRV
PGND
SYNP
SYNN
SRP
SRN
BAT
EAO
EAI
FBO
ISYNSET
TML
R568
432K_1%
C53
0.1uF_25v
R567
31.6K_1%
C564
OPEN
R5043
10K_5%
R570
47K_5%
C55
1uF_10v
R569
100K_5%
R548
100K_5%
R551
100K_5%
ACPRES_R
ACPRES
R566
10K_5%
CHG_EN#
BATT_CLK
BATT_DATA
R565
10_5%
D3
SDM20U30
C559
0.1uF_25v
C58
1uF_25v
Q507
FAIR_FDMS9620S_MLP_8P
L502
SLF7055T_100M4R0_T3PF
C31
10uF_25v_K_X5R
R547
0.01_1%_1W
C537
0.1uF_25v
C32
10uF_25v_K_X5R
Q505
FDS6675BZ
R36
OPEN
C33
0.01uF_50v
C536
0.1uF_25v
C538
0.1uF_25v
C539
0.1uF_25v
C540
0.1uF_25v
R549
51.1K_1%
R70
200K_1%
R69
18K_5%
C54
100pF_50v
R72
0_5%
C56
56pF_50v
R71
10K_1%
C57
1500pF_50v
2VREF
R32
100K_5%
R33
47K_1%
R35
26.1K_1%
MAX_ADPT_RST
67.84W
U2-A
TI_LMV393IDGKR_SOP_8P
R550
10K_5%
C17
0.1uF_16v
R34
47K_1%
R13
39.2K_1%
C16
0.1uF_16v
R12
100K_5%
U2-B
TI_LMV393IDGKR_SOP_8P
MAX_ADPT
87.3W
INVENTEC
TITLE
TETON
DC &BATTERY CHANGER
SIZE A3
CODE CS
DOC. NUMBER Model_No
REV AX1
SHEET 5 OF 54
RDEE3
10-Dec-2007

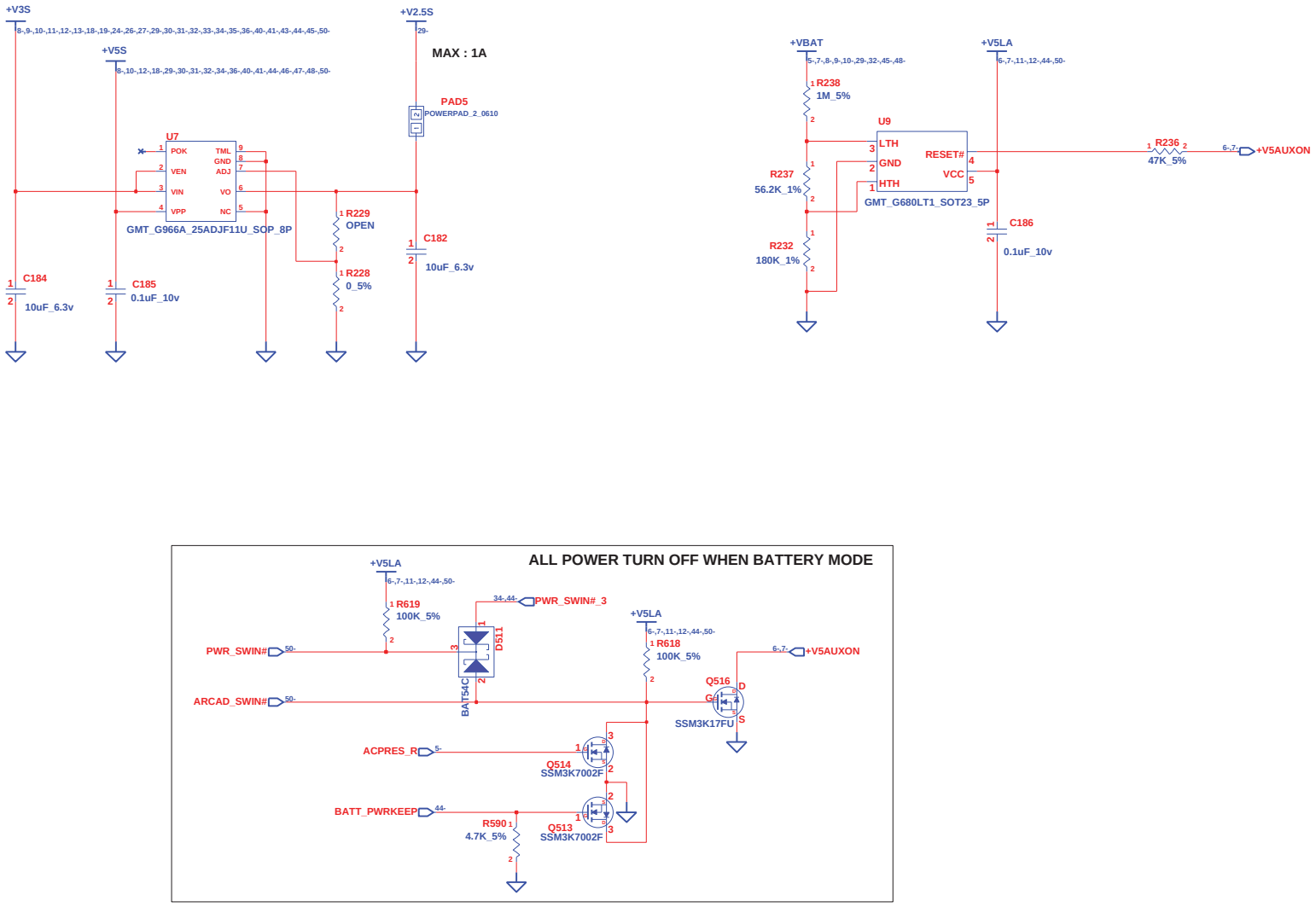

INVENTEC			
TITLE	TETON +V2.5S / RESET		
SIZE A3	CODE CS	DOC. NUMBER Model_No	REV AX1
CHANGE by RDEE3	10-Dec-2007	SHEET 6 OF 54	

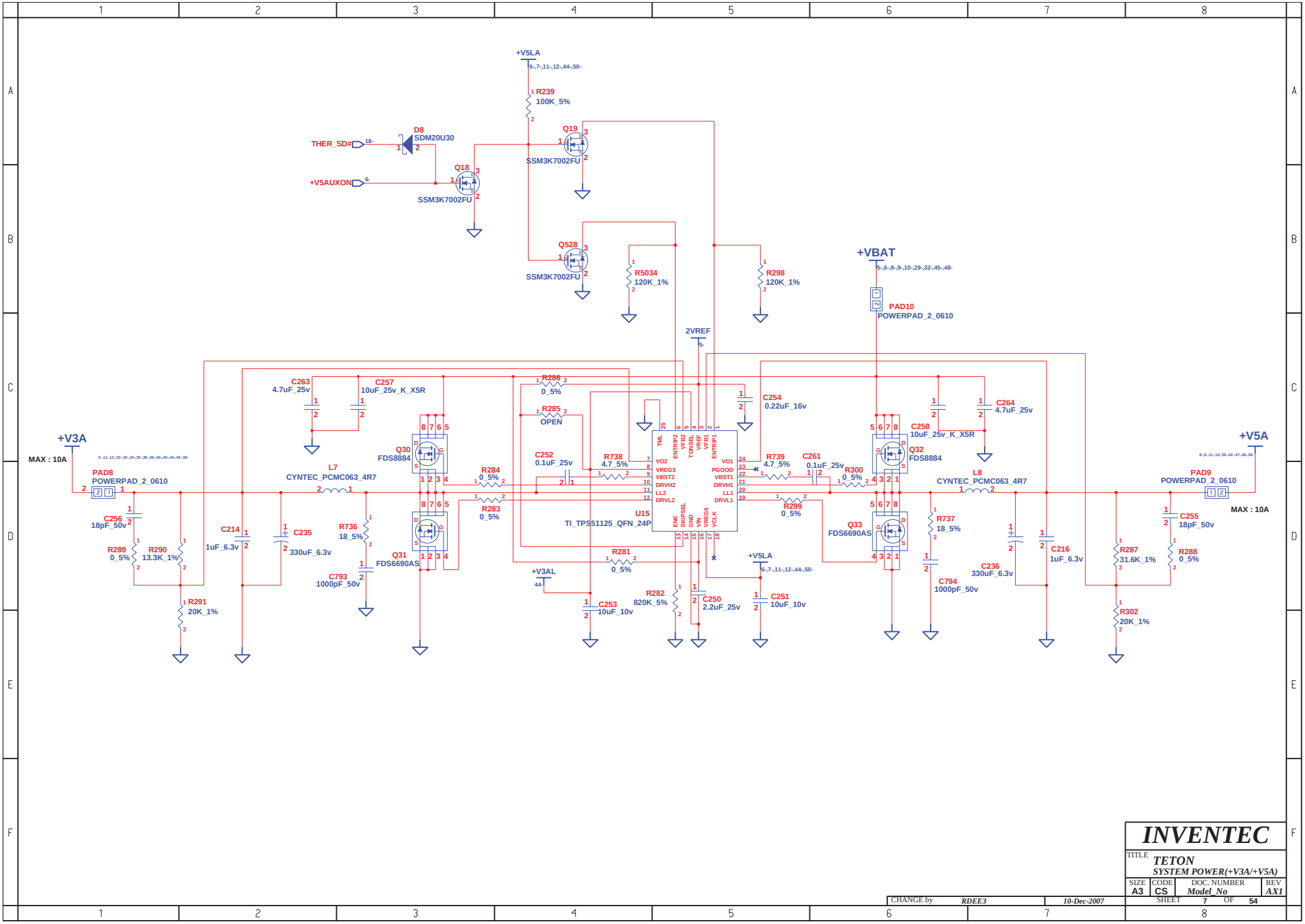

INVENTEC

TITLE **TETON**
SYSTEM POWER(+V3A/+V5A)

SIZE	CODE	DOC. NUMBER	REV
A3	CS	Model_No	AX1

CHANGE by RDEE3 | 10-Dec-2007 | SHEET 7 OF 54

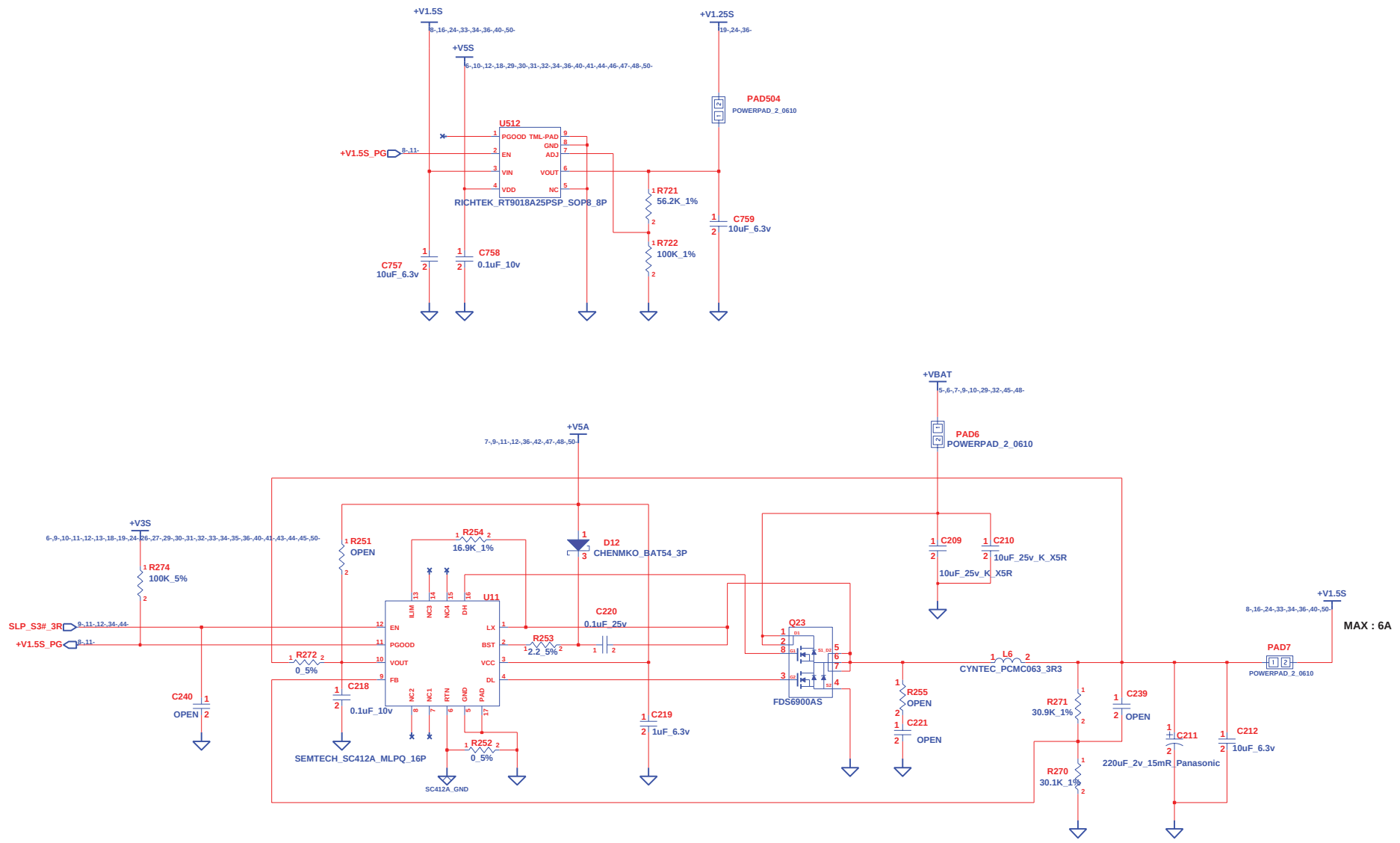

INVENTEC			
TITLE TETON SYSTEM POWER (+V1.8 / +V1.25S)			
SIZE A3	CODE CS	DOC. NUMBER Model_No	REV AX1
CHANGE by RDEE3	10-Dec-2007	SHEET 8 OF 54	

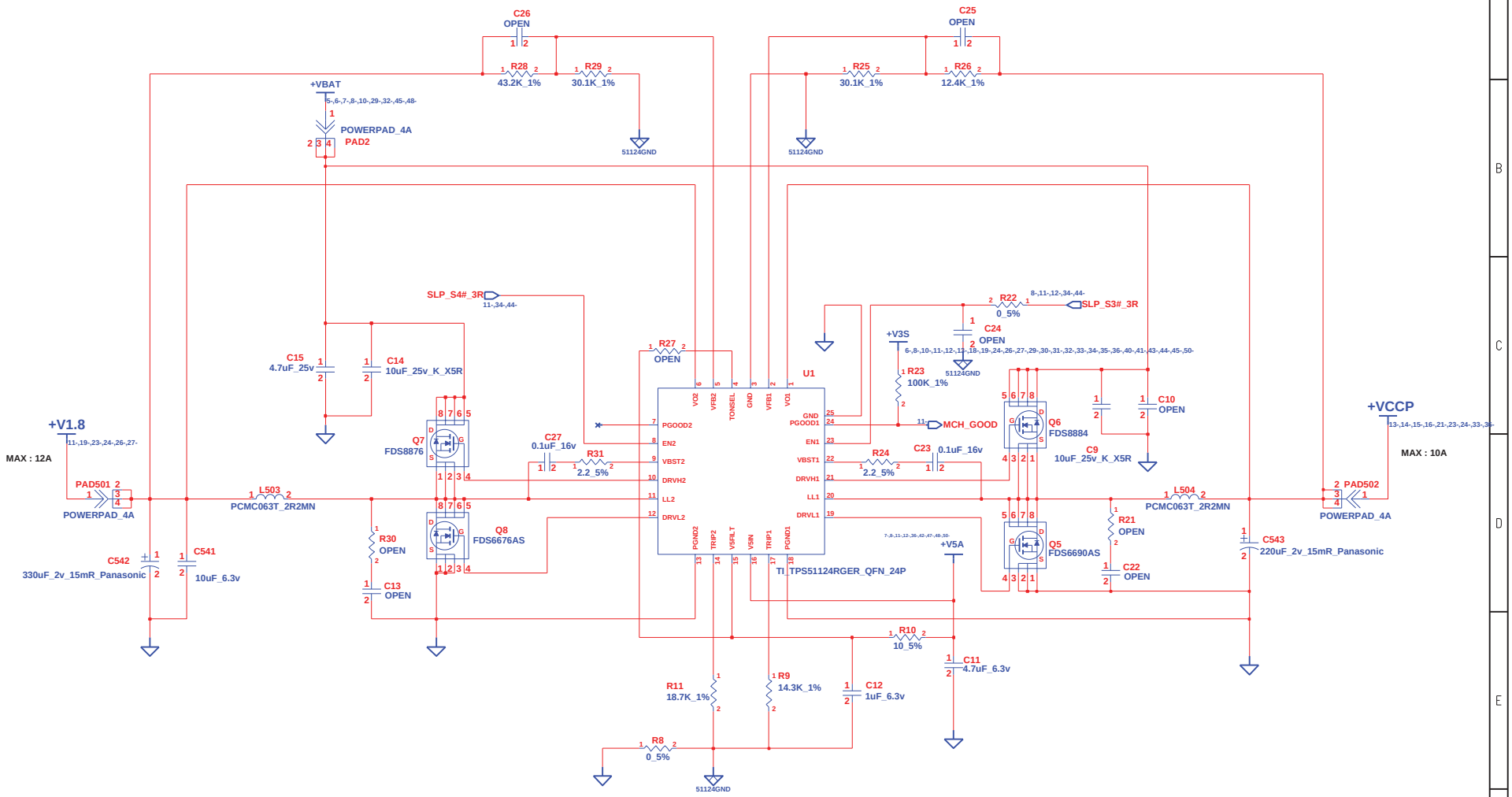

INVENTEC

TITLE **TETON**

SYSTEM POWER(+V1.5S / +VCCP)

SIZE	CODE	DOC. NUMBER	REV
A3	CS	Model_No	AX1

CHANGE by RDEE3 | 10-Dec-2007 | SHEET 9 OF 54

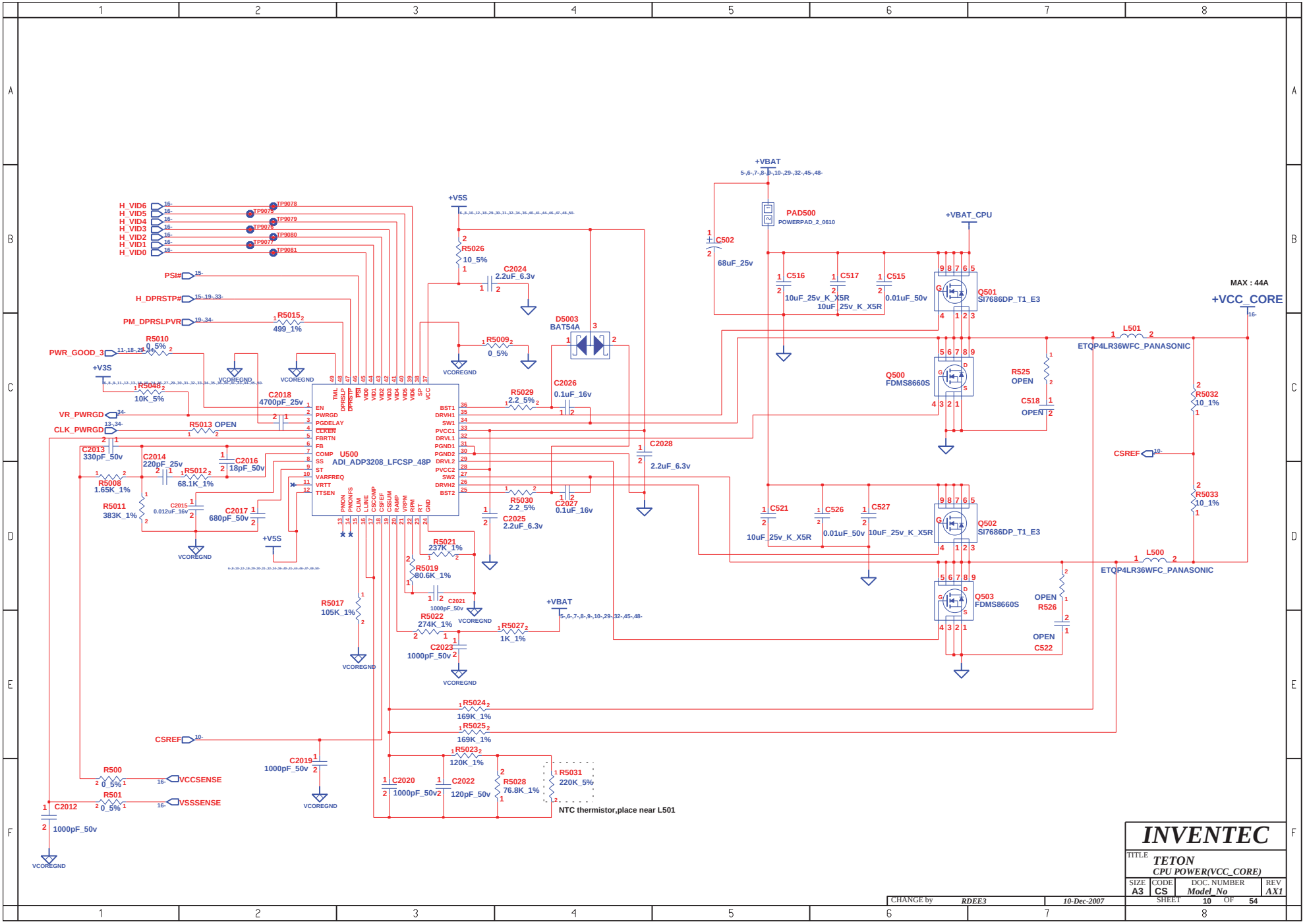
H_VID6
H_VID5
H_VID4
H_VID3
H_VID2
H_VID1
H_VID0
TP9078
TP9079
TP9076
TP9080
TP9077
TP9081
PSI#
H_DPRSTP#
PM_DPRSLPVR
PWR_GOOD_3
VR_PWRGD
CLK_PWRGD
+V3S
+V5S
R5010 0_5%
R5015 499_1%
R5048 10K_5%
R5013 OPEN
C2018 4700pF_25v
C2013 330pF_50v
C2014 220pF_25v
C2016 18pF_50v
R5012 68.1K_1%
R5008 1.65K_1%
R5011 383K_1%
C2015 0.012uF_16v
C2017 680pF_50v
U500
ADI_ADP3208_LFCSP_48P
EN
PWRGD
PGDELAY
CLKEN
FBRTN
FB
COMP
SS
ST
VARFREQ
VRTT
TTSEN
TIM
DPRSLP
DPRSTP
PSI
VID0
VID1
VID2
VID3
VID4
VID5
VID6
SP
VCC
BST1
DRVH1
SW1
PVCC1
DRVL1
PGND1
PGND2
DRVL2
PVCC2
SW2
DRVH2
BST2
PMON
PMONFS
CLIM
LLINE
CSCOMP
CSEFF
CSSUM
RAMP
VRPM
RPM
RT
GND
R5026 10_5%
C2024 2.2uF_6.3v
R5009 0_5%
D5003 BAT54A
C2026 0.1uF_16v
R5029 2.2_5%
C2028 2.2uF_6.3v
R5030 2.2_5%
C2027 0.1uF_16v
C2025 2.2uF_6.3v
R5021 237K_1%
R5019 80.6K_1%
C2021 1000pF_50v
R5017 105K_1%
R5022 274K_1%
R5027 1K_1%
C2023 1000pF_50v
+VBAT
5-,6-,7-,8-,9-,10-,29-,32-,45-,48-
PAD500 POWERPAD_2_0610
C502 68uF_25v
C516 10uF_25v_K_X5R
C517 10uF_25v_K_X5R
C515 0.01uF_50v
+VBAT_CPU
Q501 SI7686DP_T1_E3
Q500 FDMS8660S
R525 OPEN
C518 OPEN
L501 ETQP4LR36WFC_PANASONIC
MAX : 44A
+VCC_CORE
R5032 10_1%
CSREF
R5033 10_1%
C521 10uF_25v_K_X5R
C526 0.01uF_50v
C527 10uF_25v_K_X5R
Q502 SI7686DP_T1_E3
L500 ETQP4LR36WFC_PANASONIC
Q503 FDMS8660S
OPEN R526
OPEN C522
R5024 169K_1%
R5025 169K_1%
R5023 120K_1%
C2019 1000pF_50v
C2020 1000pF_50v
C2022 120pF_50v
R5028 76.8K_1%
R5031 220K_5%
NTC thermistor,place near L501
R500 0_5%
R501 0_5%
VCCSENSE
VSSSENSE
C2012 1000pF_50v
VCOREGND
INVENTEC
TITLE
TETON
CPU POWER(VCC_CORE)
SIZE A3
CODE CS
DOC. NUMBER Model_No
REV AX1
CHANGE by RDEE3
10-Dec-2007
SHEET 10 OF 54

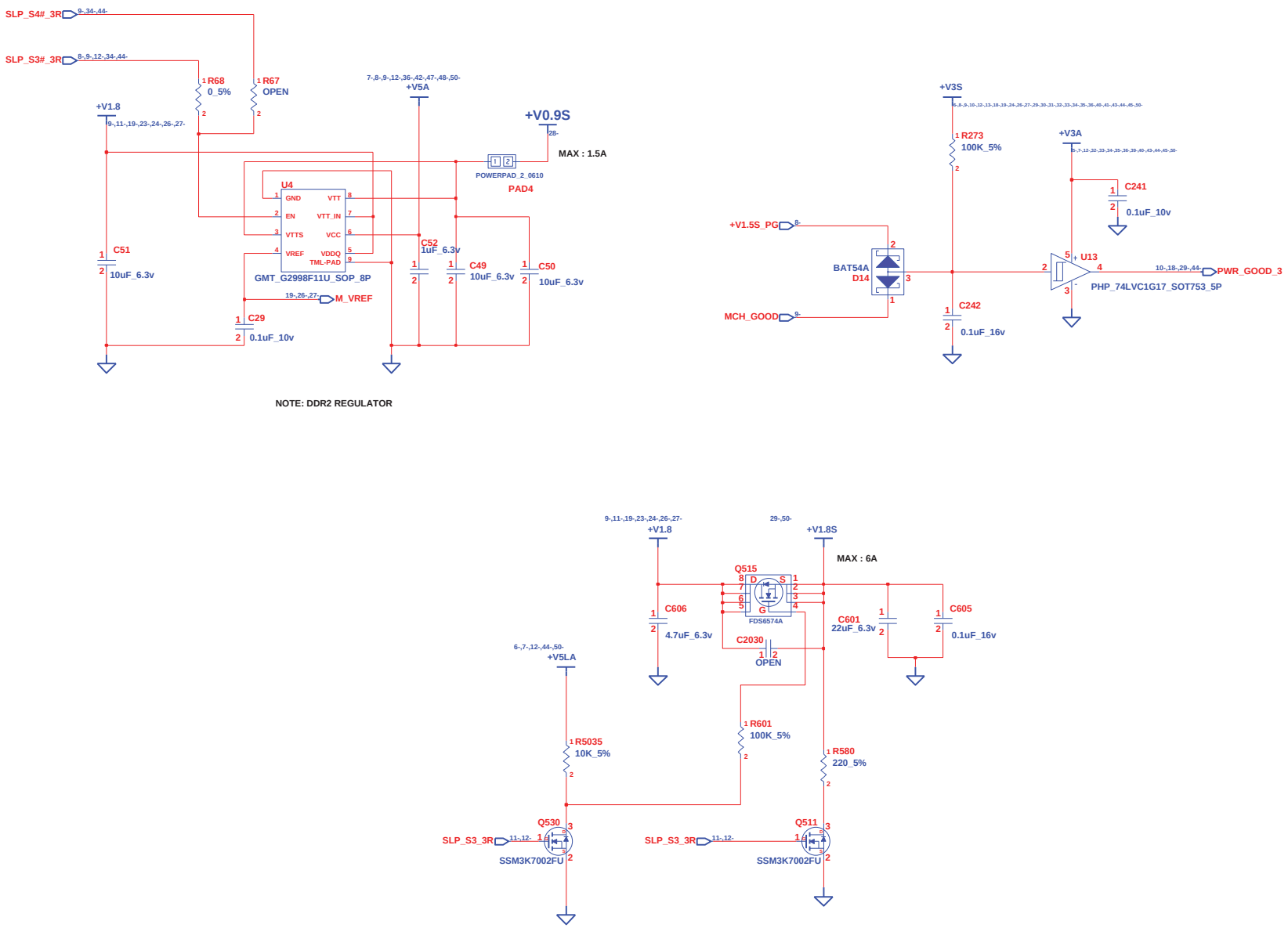

INVENTEC			
TITLE	TETON +V0.9S / +V1.8S / POWER GOOD		
SIZE A3	CODE CS	DOC. NUMBER Model_No	REV AX1
CHANGE by RDEE3	10-Dec-2007	SHEET 11 OF 54	

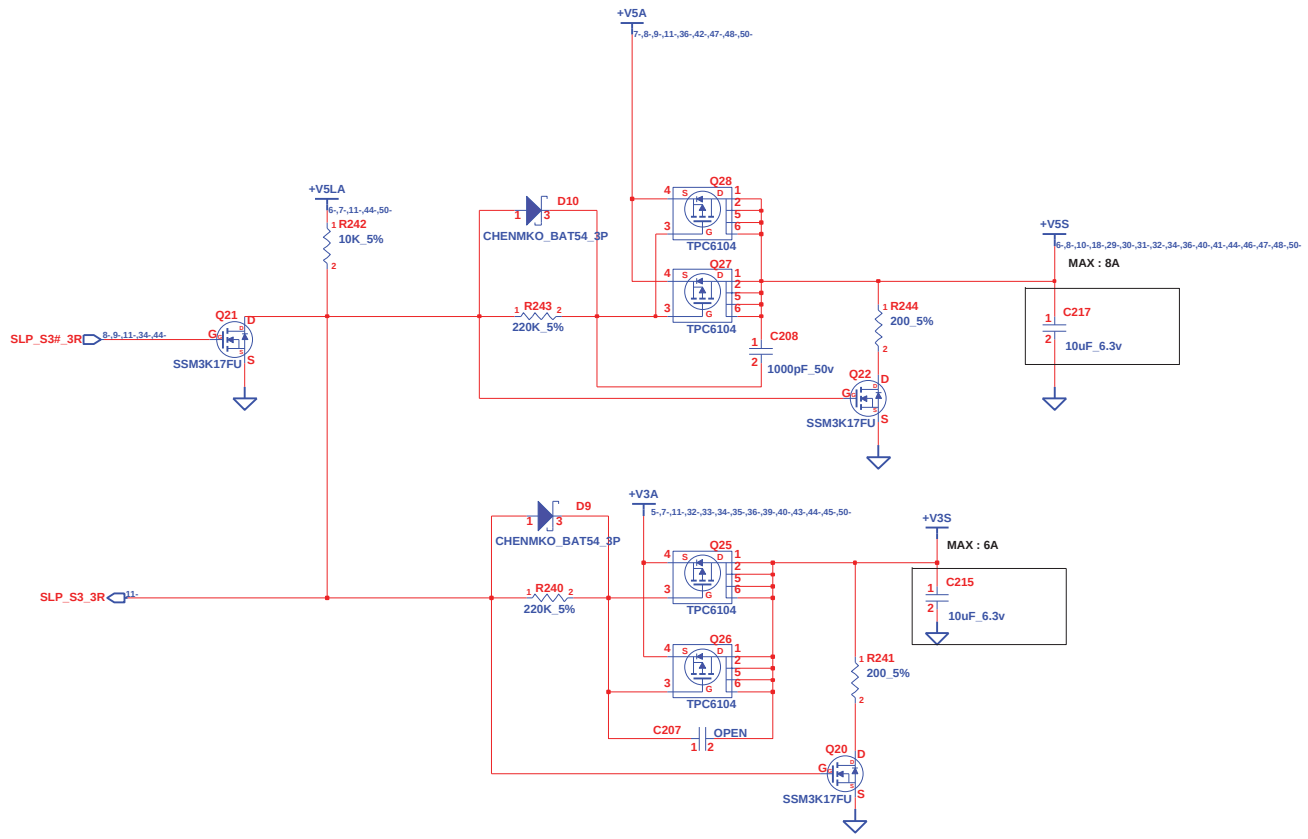

INVENTEC			
TITLE	TETON POWER(+V3S / +V5S)		
SIZE A3	CODE CS	DOC. NUMBER Model_No	REV AX1
CHANGE by RDEE3	10-Dec-2007	SHEET 12 OF 54	

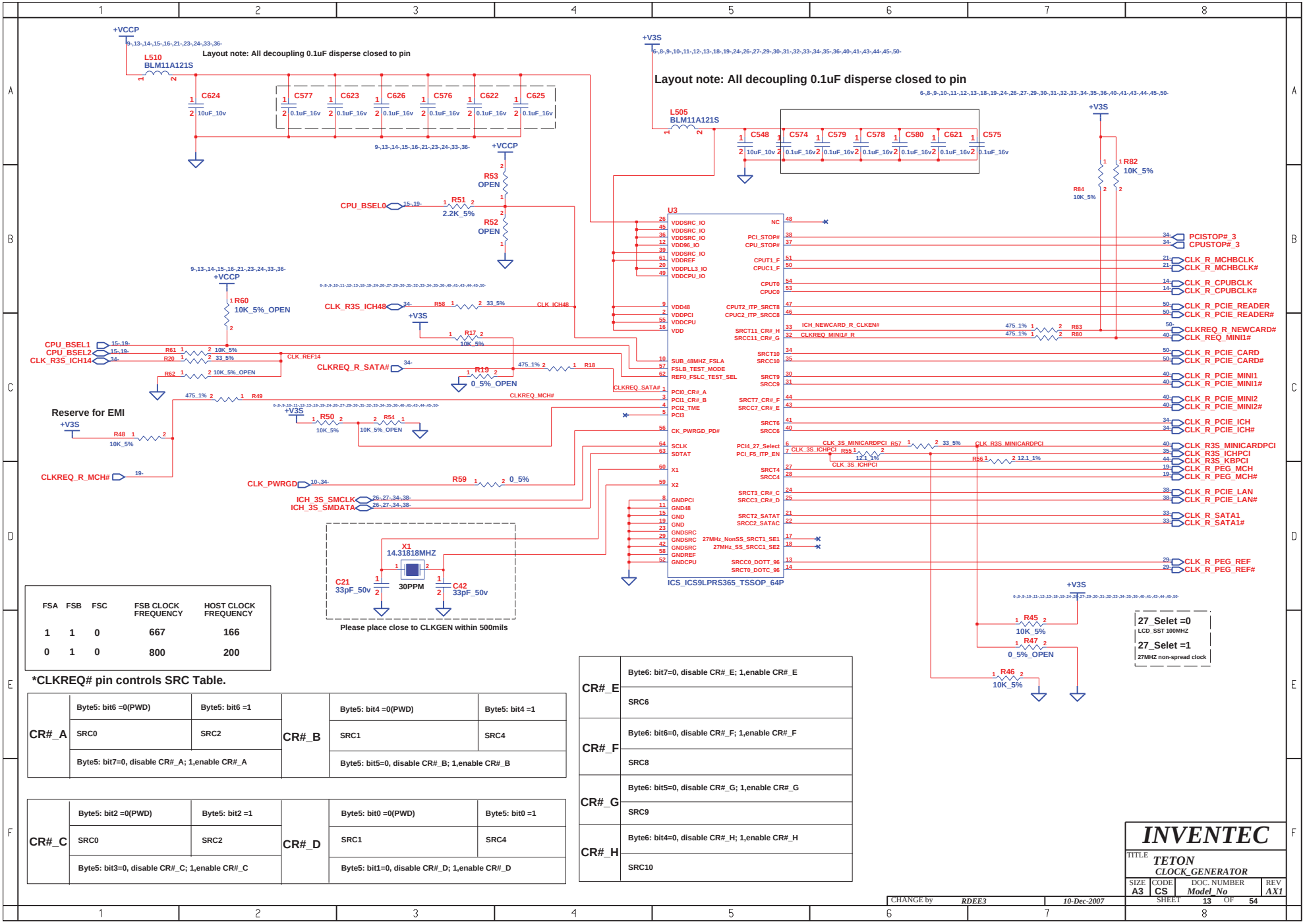

FSA	FSB	FSC	FSB CLOCK FREQUENCY	HOST CLOCK FREQUENCY
1	1	0	667	166
0	1	0	800	200

***CLKREQ# pin controls SRC Table.**

CR#_A	Byte5: bit6 =0(PWD)	Byte5: bit6 =1	CR#_B	Byte5: bit4 =0(PWD)	Byte5: bit4 =1
	SRC0	SRC2		SRC1	SRC4
	Byte5: bit7=0, disable CR#_A; 1,enable CR#_A			Byte5: bit5=0, disable CR#_B; 1,enable CR#_B	

CR#_C	Byte5: bit2 =0(PWD)	Byte5: bit2 =1	CR#_D	Byte5: bit0 =0(PWD)	Byte5: bit0 =1
	SRC0	SRC2		SRC1	SRC4
	Byte5: bit3=0, disable CR#_C; 1,enable CR#_C			Byte5: bit1=0, disable CR#_D; 1,enable CR#_D	

CR#_E	Byte6: bit7=0, disable CR#_E; 1,enable CR#_E
	SRC6
CR#_F	Byte6: bit6=0, disable CR#_F; 1,enable CR#_F
	SRC8
CR#_G	Byte6: bit5=0, disable CR#_G; 1,enable CR#_G
	SRC9
CR#_H	Byte6: bit4=0, disable CR#_H; 1,enable CR#_H
	SRC10

INVENTEC

TITLE TETON CLOCK_GENERATOR

SIZE	CODE	DOC. NUMBER	REV
A3	CS	Model_No	AX1

CHANGE by RDEE3 | 10-Dec-2007 | SHEET 13 OF 54

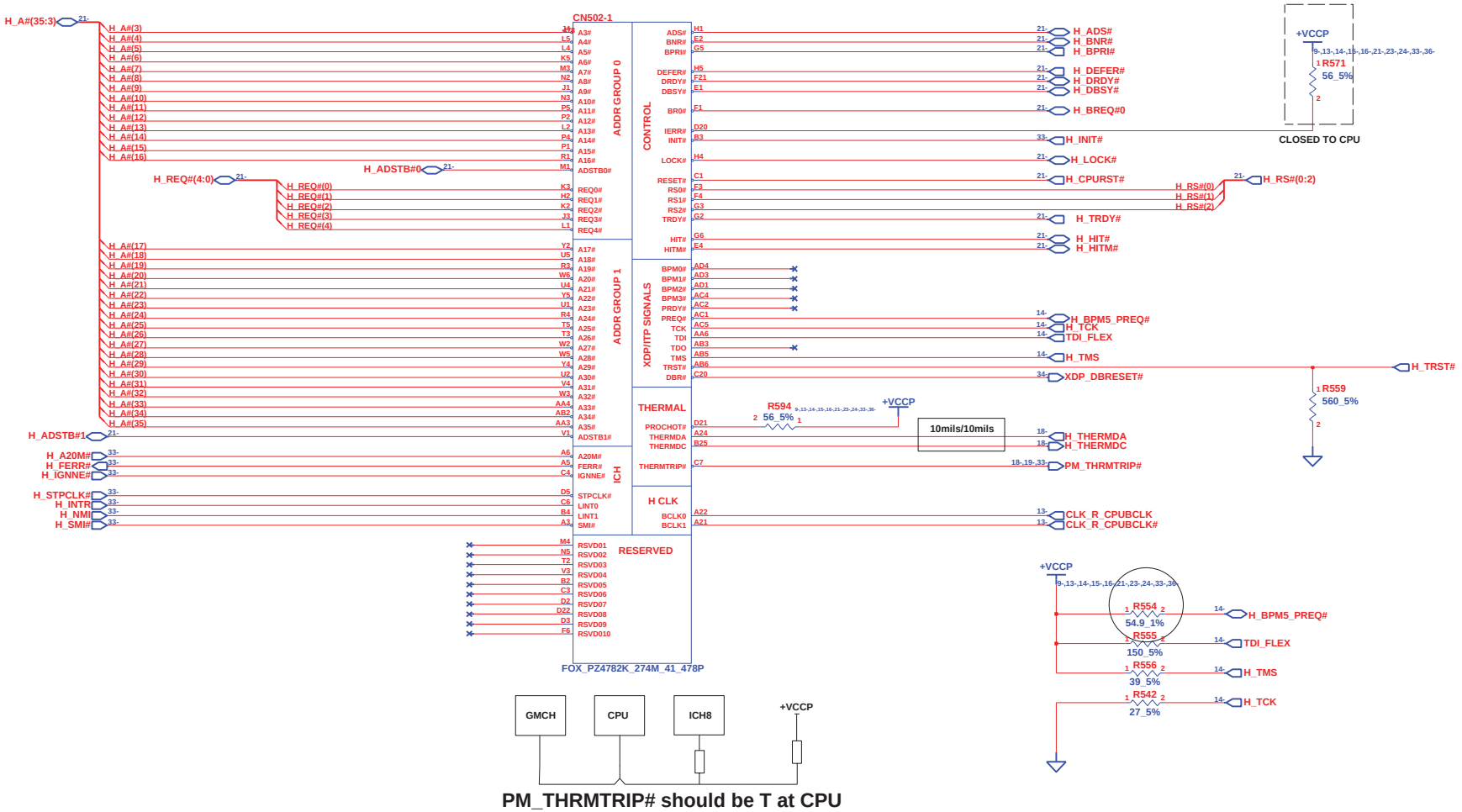

PM_THRMTRIP# should be T at CPU

INVENTEC			
TITLE: TETON Merom-1			
SIZE: A3	CODE: CS	DOC. NUMBER: Model_No	REV: AX1
CHANGE by: RDEE3	10-Dec-2007	SHEET 14 OF 54	

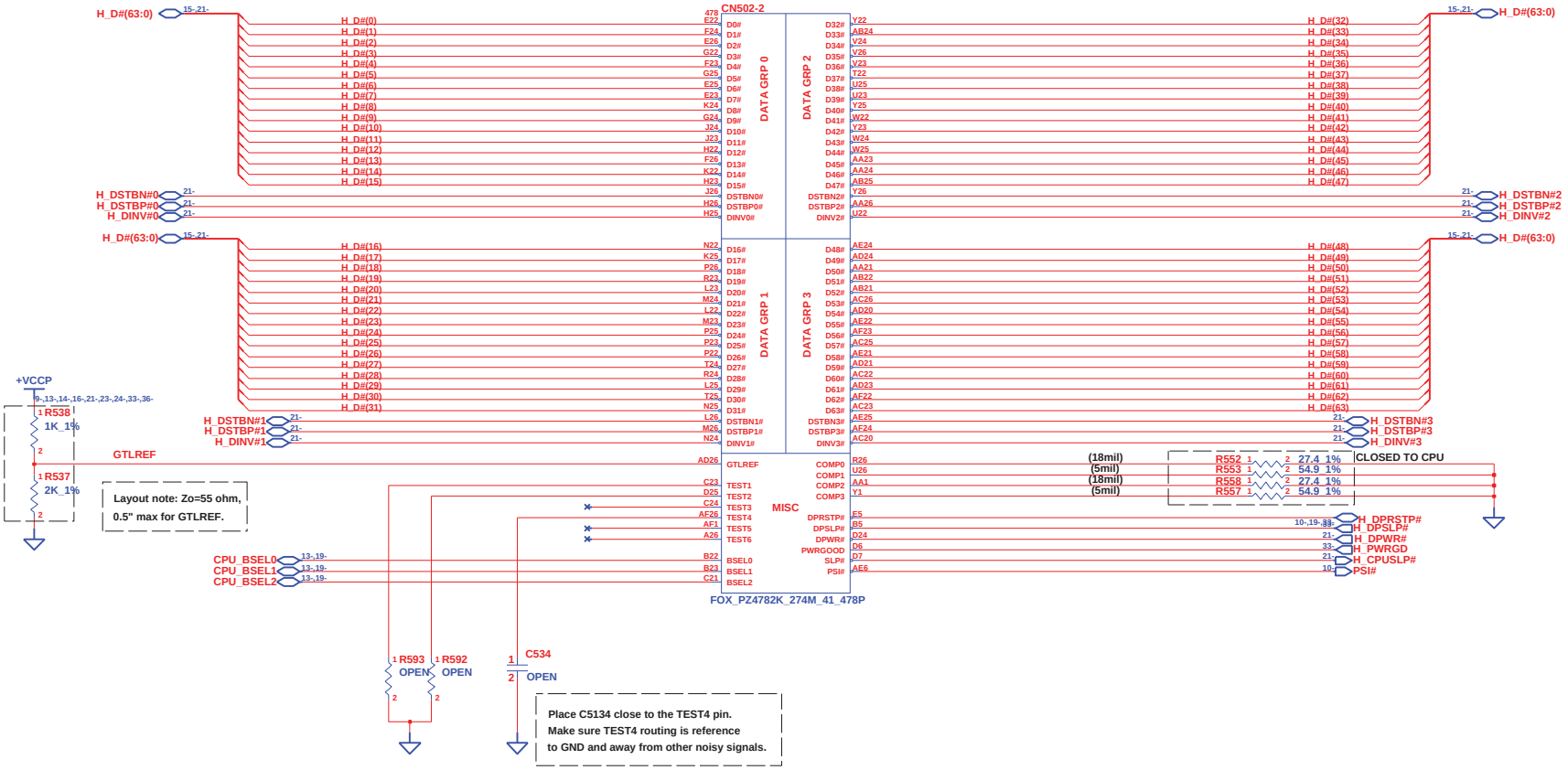

INVENTEC

TITLE TETON
Merom-2

SIZE	CODE	DOC. NUMBER	REV
A3	CS	Model_No	AX1

CHANGE by RDEE3 10-Dec-2007 SHEET 15 OF 54

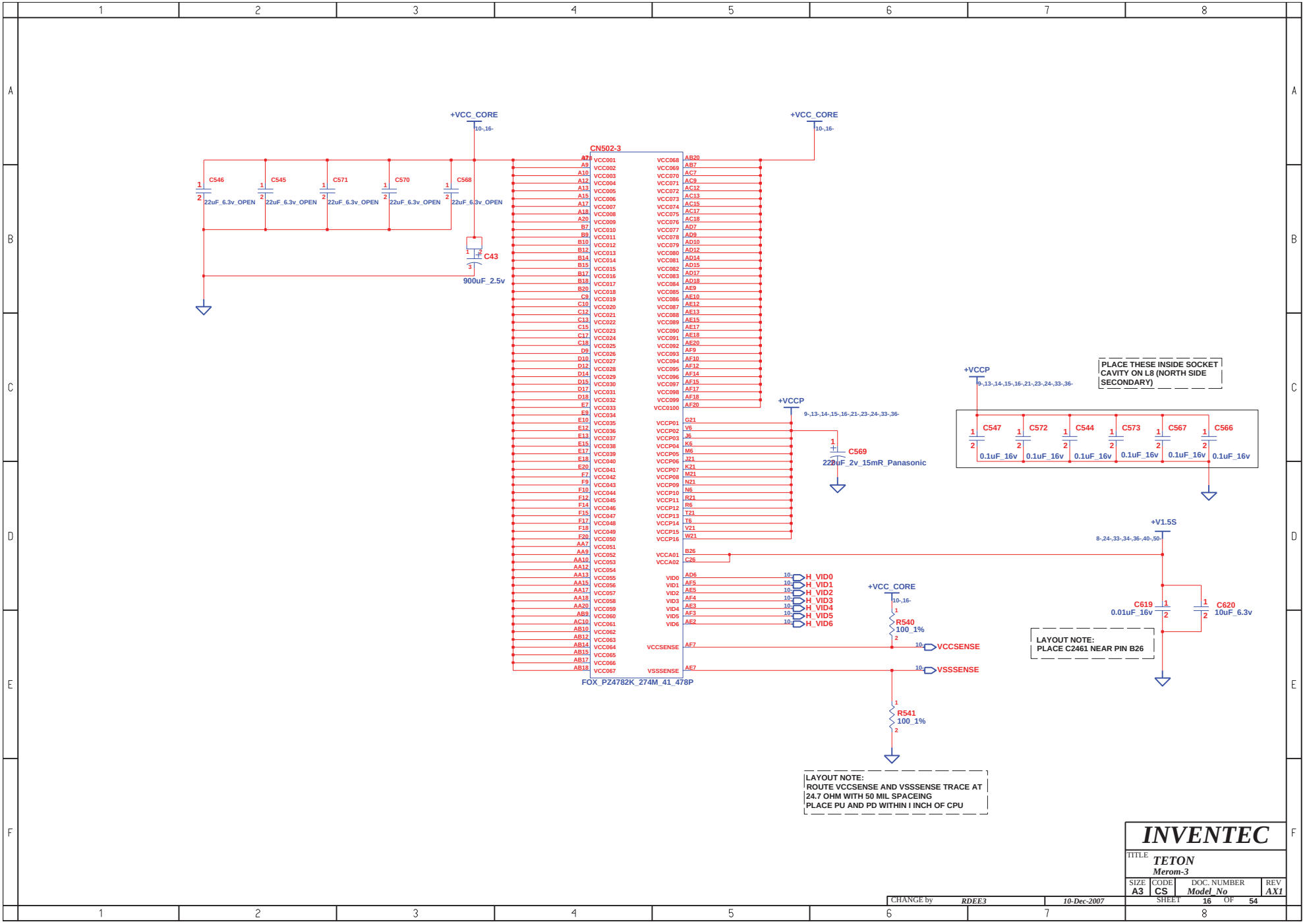

INVENTEC

TITLE TETON
Merom-3

SIZE	CODE	DOC. NUMBER	REV
A3	CS	Model_No	AX1

CHANGE by RDEE3 10-Dec-2007 SHEET 16 OF 54

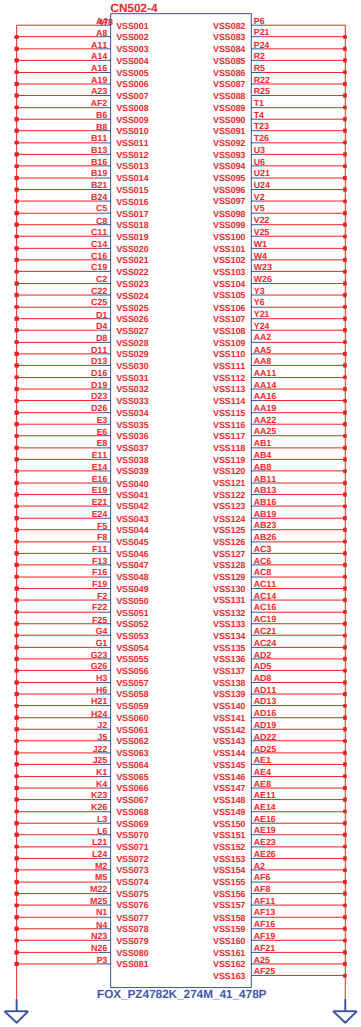

CHANGE by	RDEE3	10-Dec-2007	

INVENTEC

TITLE **TETON**
Merom-4

SIZE	CODE	DOC. NUMBER	REV
A3	CS	Model_No	AX1

SHEET 17 OF 54

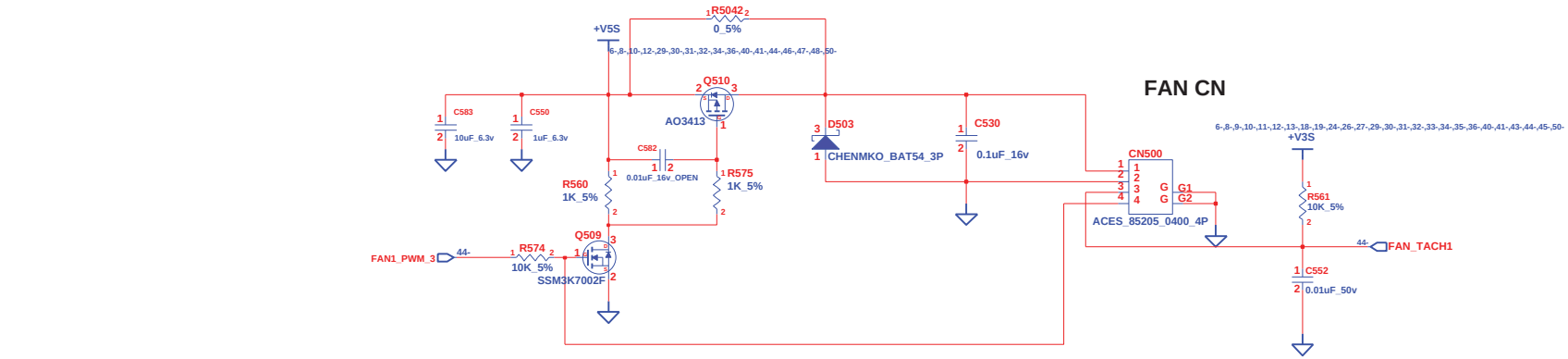

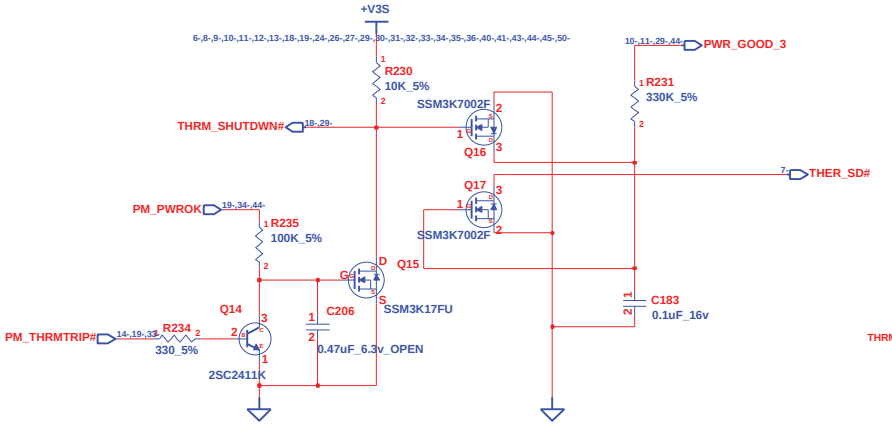

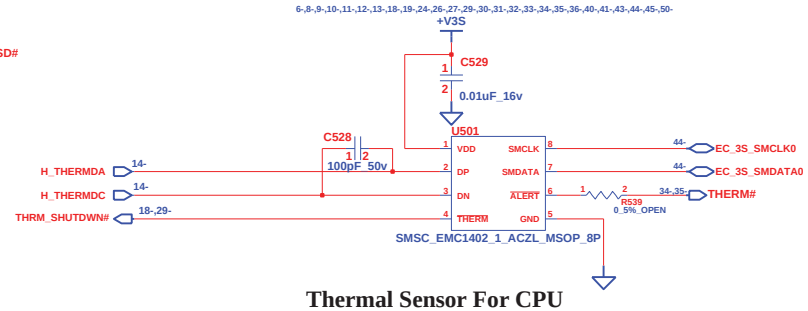

Thermal Sensor For CPU

INVENTEC			
TITLE TETON THERMAL&FAN CONTROLLER			
SIZE A3	CODE CS	DOC. NUMBER Model_No	REV AX1
CHANGE by RDEE3	10-Dec-2007	SHEET 18 OF 54	

MCH_CFG(5)	LOW=DMIx2 HIGH=DMIx4

MCH_CFG(7) (CPU Strap)	LOW=RSVD HIGH=Mobile CPU

MCH_CFG(9) PCIE Graphics Lane	LOW=Reverse Lane HIGH=Normal operation

MCH_CFG(11) PSB 4X CLK ENABLE	LOW=CALISTOGA HIGH=RESERVED

MCH_CFG(13:12) XOR/ALLZ	00=PARTIAL CLOCK GATING DISABLE 01=XOR MODE ENABLE 10=ALL-Z MODE ENABLE 11=NORMAL OPERATION

MCH_CFG(16) (FSB Dynamic ODT)	LOW=Dynamic ODT Disable HIGH=Dynamic ODT Enable

NOTE: CFG[2:0] STRP : 001b : 533 MT/S
011b : 667 MT/S

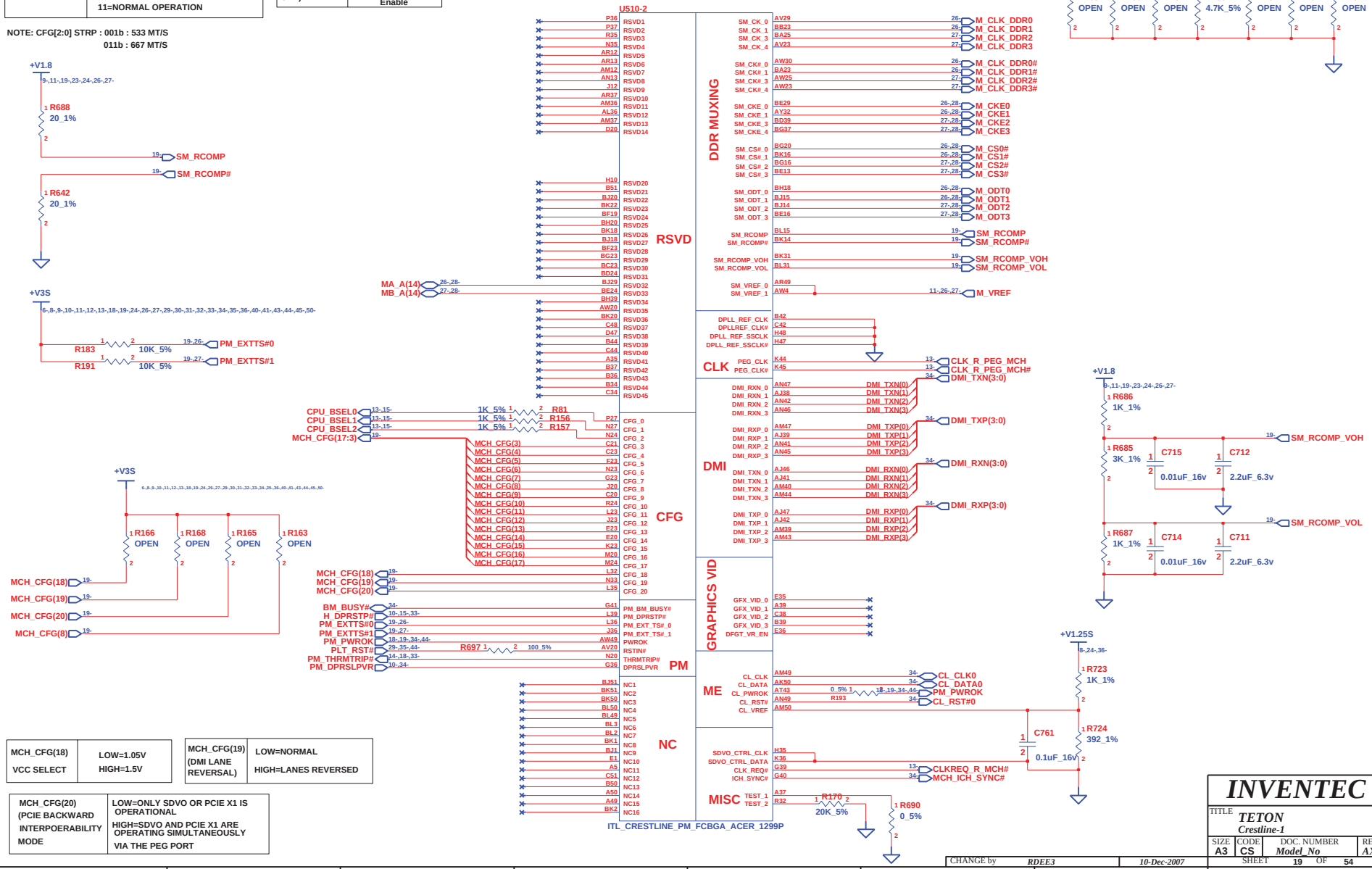

MCH_CFG(18) VCC SELECT	LOW=1.05V HIGH=1.5V

MCH_CFG(19) (DMI LANE REVERSAL)	LOW=NORMAL HIGH=LANES REVERSED

MCH_CFG(20) (PCIE BACKWARD INTERPOERABILITY MODE	LOW=ONLY SDVO OR PCIE X1 IS OPERATIONAL HIGH=SDVO AND PCIE X1 ARE OPERATING SIMULTANEOUSLY VIA THE PEG PORT

INVENTEC

TITLE: TETON
Crestline-1

SIZE	CODE	DOC. NUMBER	REV
A3	CS	Model_No	AX1

CHANGE by RDEE3 | 10-Dec-2007 | SHEET 19 OF 54

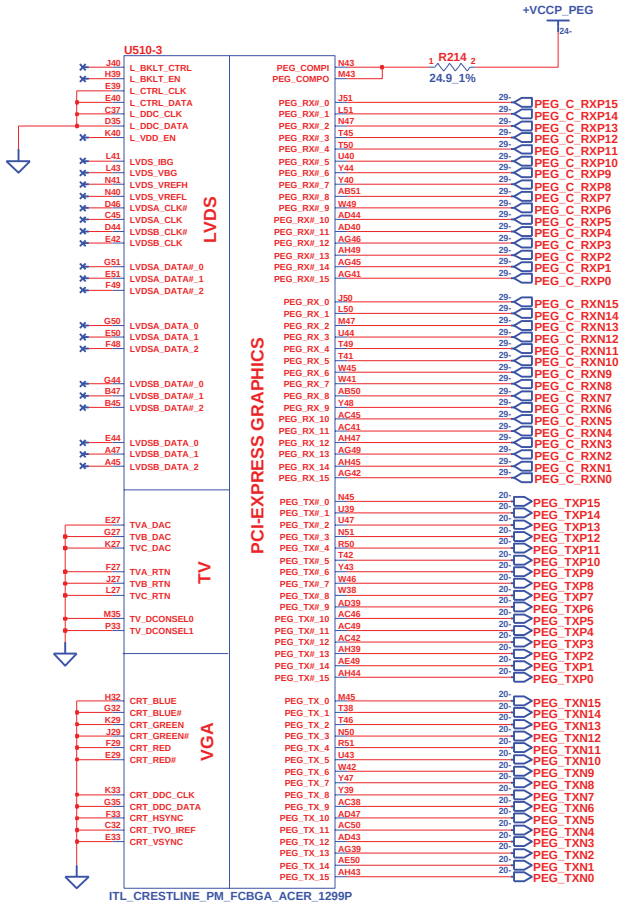

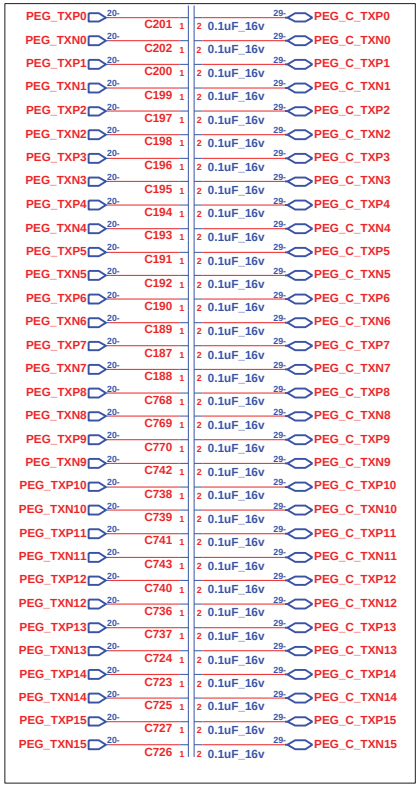

Place to near NB

CHANGE by	RDEE3
	10-Dec-2007

INVENTEC

TITLE **TETON**
Crestline-2

SIZE	CODE	DOC. NUMBER	REV
A3	CS	Model_No	AX1

SHEET 20 OF 54

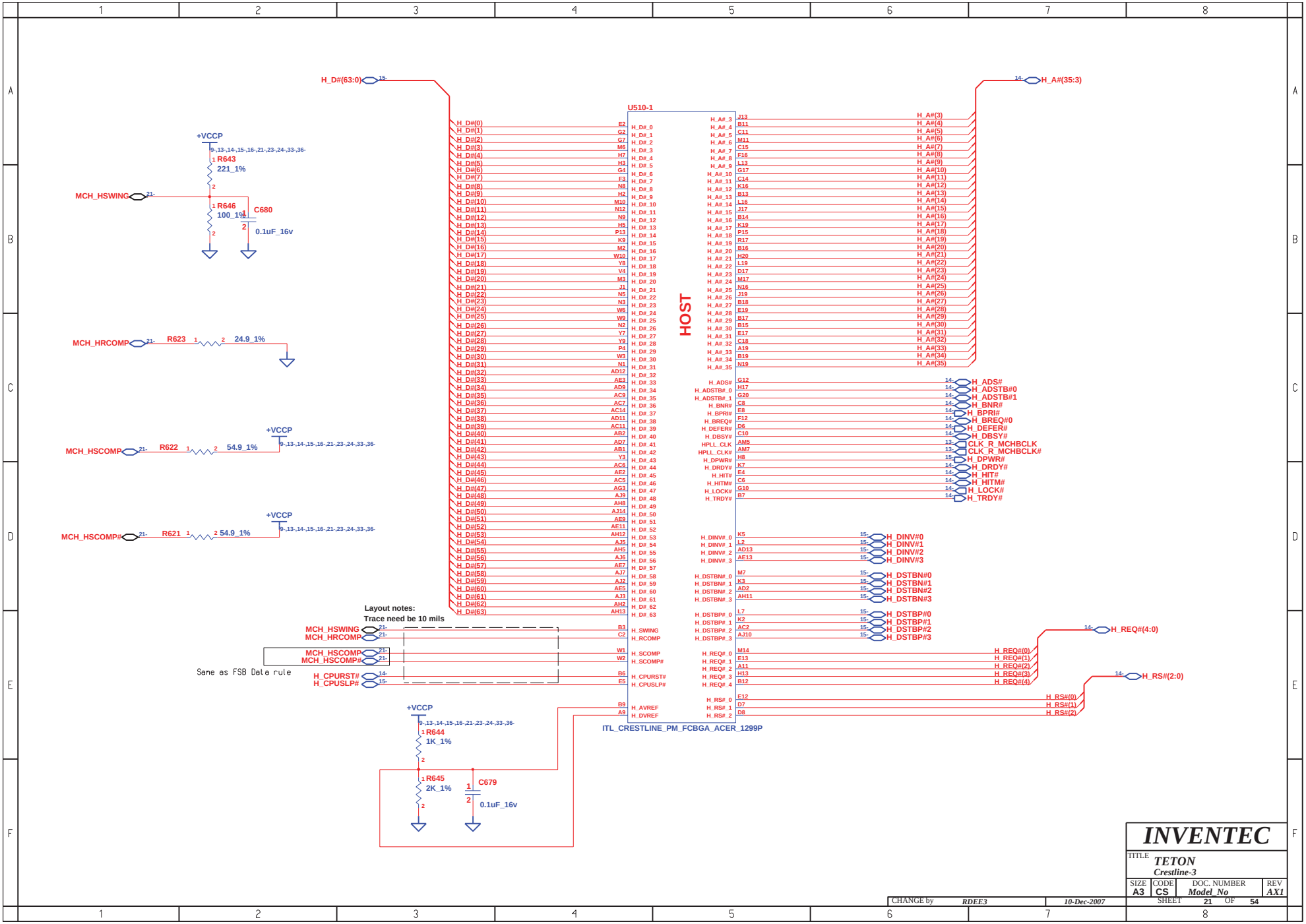

INVENTEC

TITLE TETON
Crestline-3

SIZE	CODE	DOC. NUMBER	REV
A3	CS	Model_No	AX1

CHANGE by RDEE3 10-Dec-2007 SHEET 21 OF 54

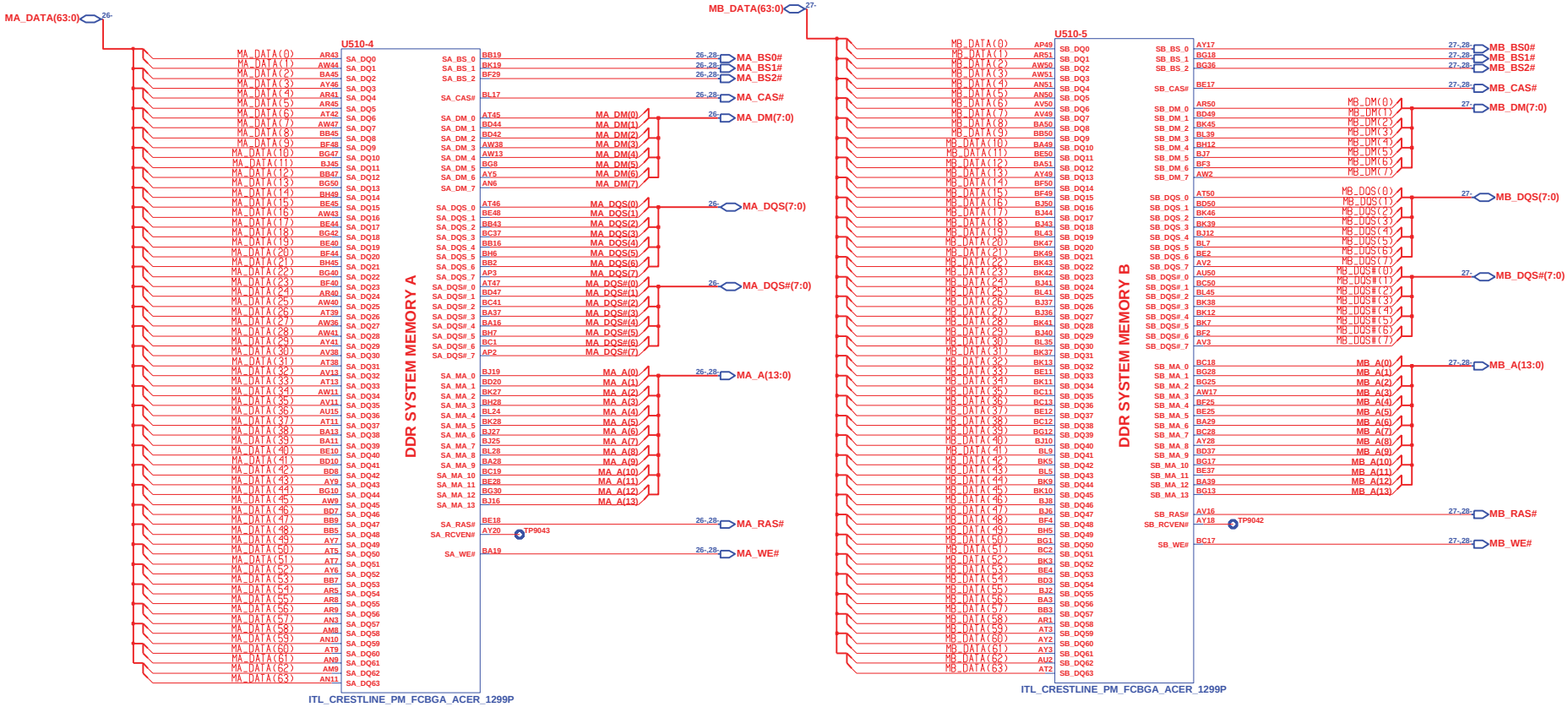

CHANGE by	RDEE3	10-Dec-2007	

INVENTEC

TITLE **TETON**
Crestline-4

SIZE	CODE	DOC. NUMBER	REV
A3	CS	Model_No	AX1

SHEET 22 OF 54

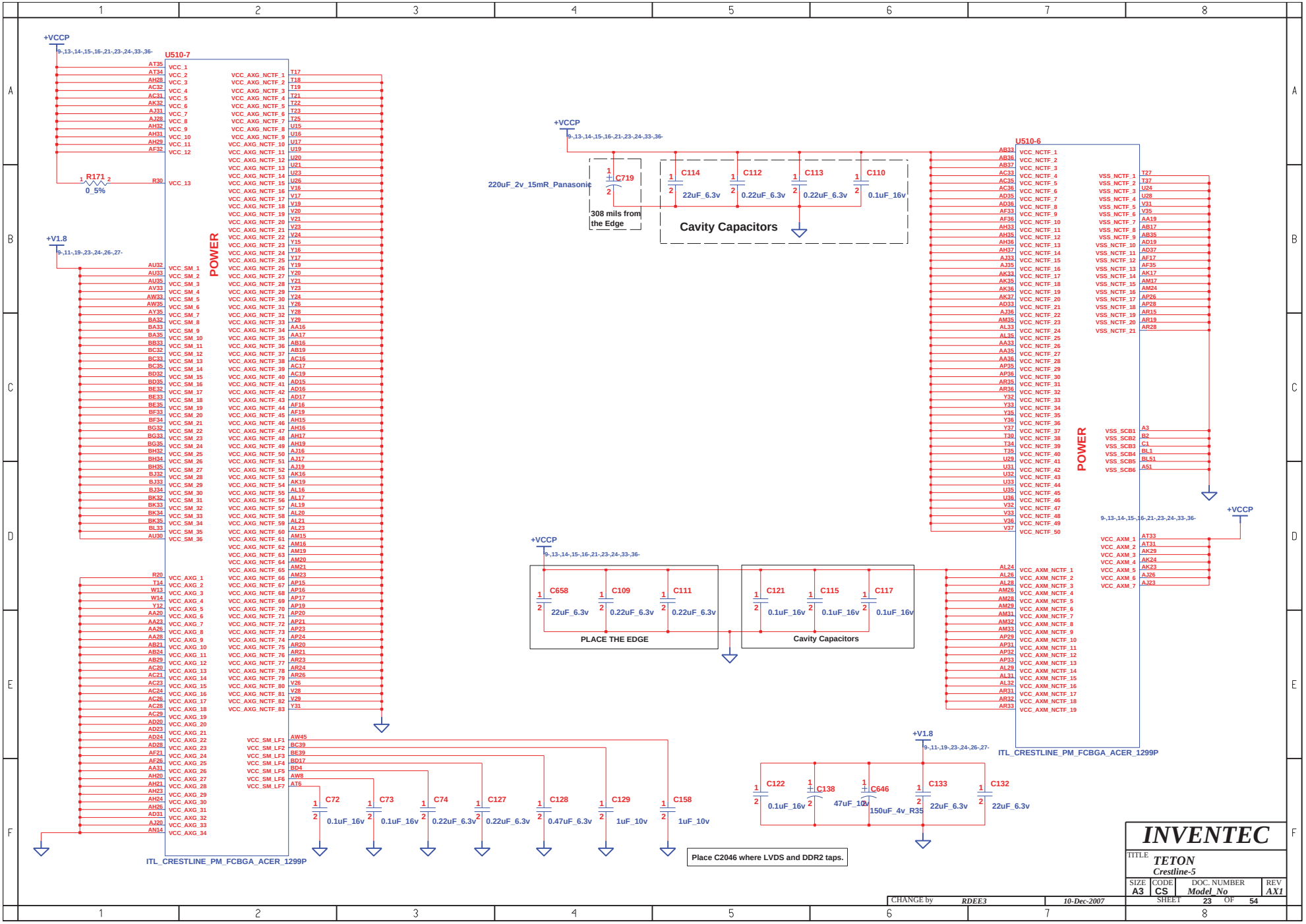
+VCCP
9,-13,-14,-15,-16,-21,-23,-24,-33,-36-
U510-7
R171
0_5%
+V1.8
9,-11,-19,-23,-24,-26,-27-
POWER
ITL_CRESTLINE_PM_FCBGA_ACER_1299P
220uF_2v_15mR_Panasonic
C719
308 mils from the Edge
C114
22uF_6.3v
C112
0.22uF_6.3v
C113
0.22uF_6.3v
C110
0.1uF_16v
Cavity Capacitors
U510-6
C658
22uF_6.3v
C109
0.22uF_6.3v
C111
0.22uF_6.3v
PLACE THE EDGE
C121
0.1uF_16v
C115
0.1uF_16v
C117
0.1uF_16v
Cavity Capacitors
C72
0.1uF_16v
C73
0.1uF_16v
C74
0.22uF_6.3v
C127
0.22uF_6.3v
C128
0.47uF_6.3v
C129
1uF_10v
C158
1uF_10v
C122
0.1uF_16v
C138
47uF_10v
C646
150uF_4v_R35
C133
22uF_6.3v
C132
22uF_6.3v
Place C2046 where LVDS and DDR2 taps.
INVENTEC
TITLE
TETON
Crestline-5
SIZE A3
CODE CS
DOC. NUMBER Model_No
REV AX1
CHANGE by RDEE3
10-Dec-2007
SHEET 23 OF 54

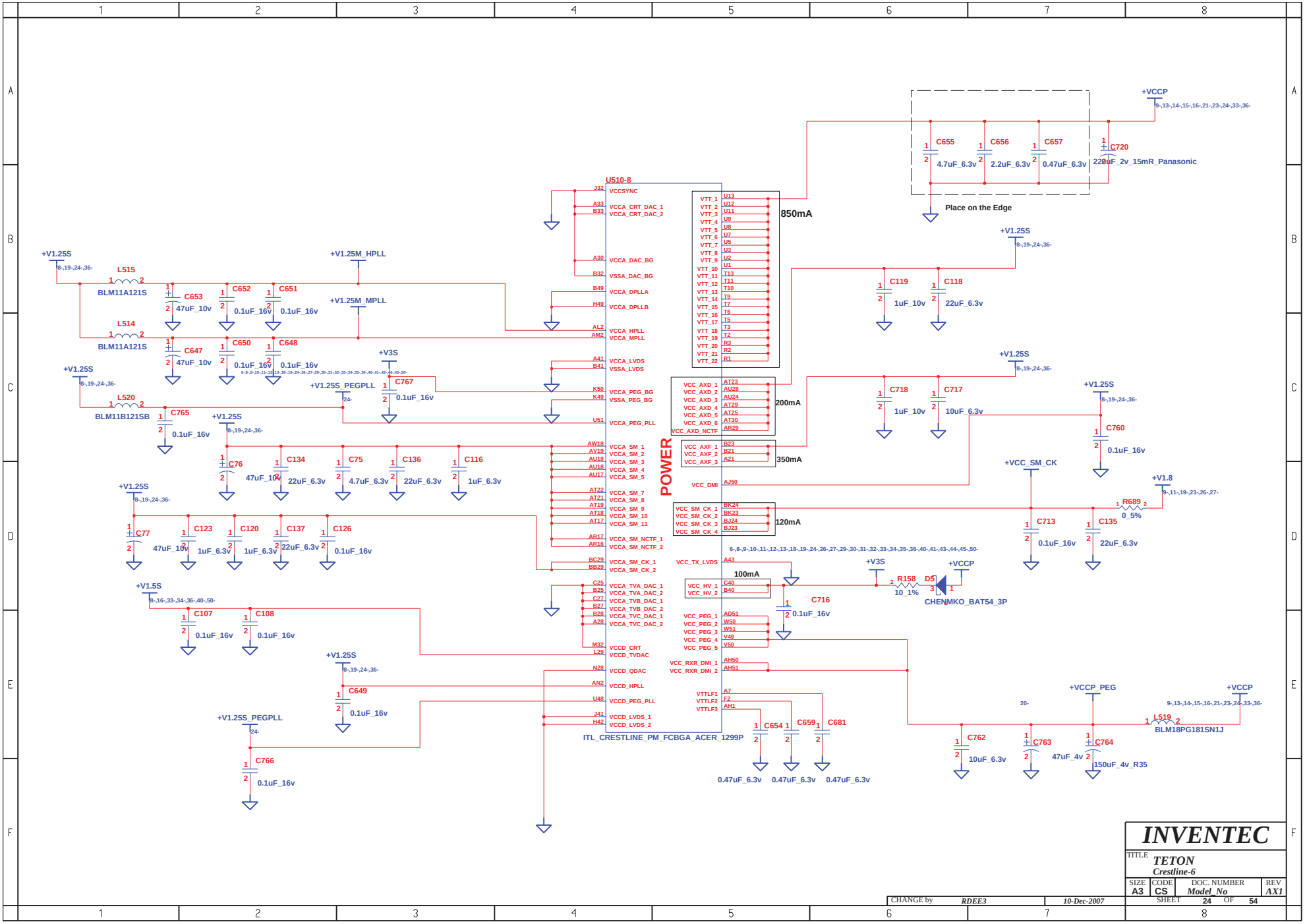
U510-8
POWER
ITL_CRESTLINE_PM_FCBGA_ACER_1299P
850mA
200mA
350mA
120mA
100mA
+VCCP
C655 4.7uF_6.3v
C656 2.2uF_6.3v
C657 0.47uF_6.3v
C720 220uF_2v_15mR_Panasonic
Place on the Edge
+V1.25S
C119 1uF_10v
C118 22uF_6.3v
C718 1uF_10v
C717 10uF_6.3v
C760 0.1uF_16v
+V1.25M_HPLL
+V1.25M_MPLL
L515 BLM11A121S
L514 BLM11A121S
L520 BLM11B121SB
C653 47uF_10v
C652 0.1uF_16v
C651 0.1uF_16v
C647 47uF_10v
C650 0.1uF_16v
C648 0.1uF_16v
+V3S
+V1.25S_PEGPLL
C767 0.1uF_16v
C765 0.1uF_16v
C76 47uF_10v
C134 22uF_6.3v
C75 4.7uF_6.3v
C136 22uF_6.3v
C116 1uF_6.3v
C77 47uF_10v
C123 1uF_6.3v
C120 1uF_6.3v
C137 22uF_6.3v
C126 0.1uF_16v
+V1.5S
C107 0.1uF_16v
C108 0.1uF_16v
C649 0.1uF_16v
C766 0.1uF_16v
+VCC_SM_CK
+V1.8
R689 0_5%
C713 0.1uF_16v
C135 22uF_6.3v
R158 10_1%
D5 CHENMKO_BAT54_3P
C716 0.1uF_16v
C654 0.47uF_6.3v
C659 0.47uF_6.3v
C681 0.47uF_6.3v
+VCCP_PEG
L519 BLM18PG181SN1J
C762 10uF_6.3v
C763 47uF_4v
C764 150uF_4v_R35
INVENTEC
TITLE TETON
Crestline-6
SIZE A3
CODE CS
DOC. NUMBER Model_No
REV AX1
CHANGE by RDEE3
10-Dec-2007
SHEET 24 OF 54

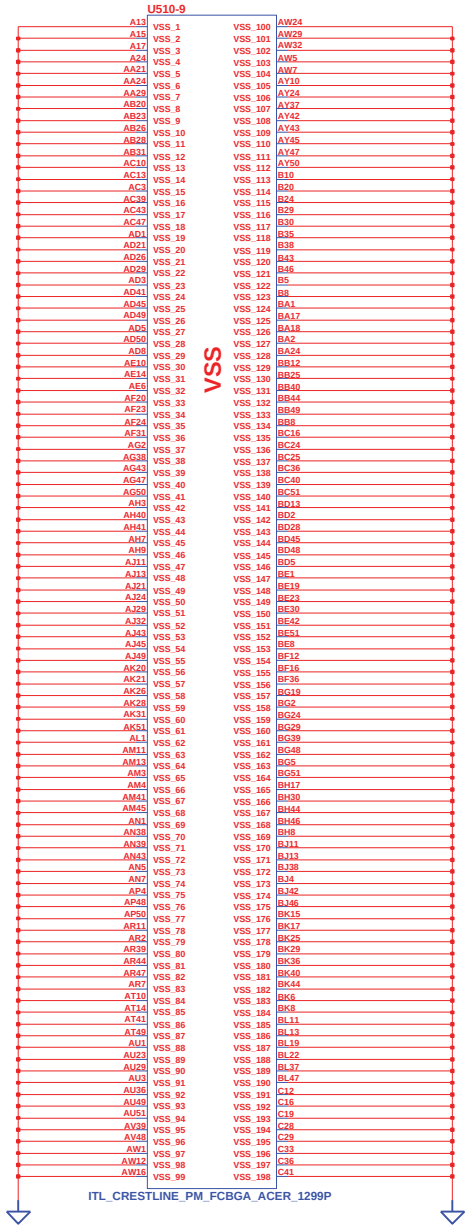

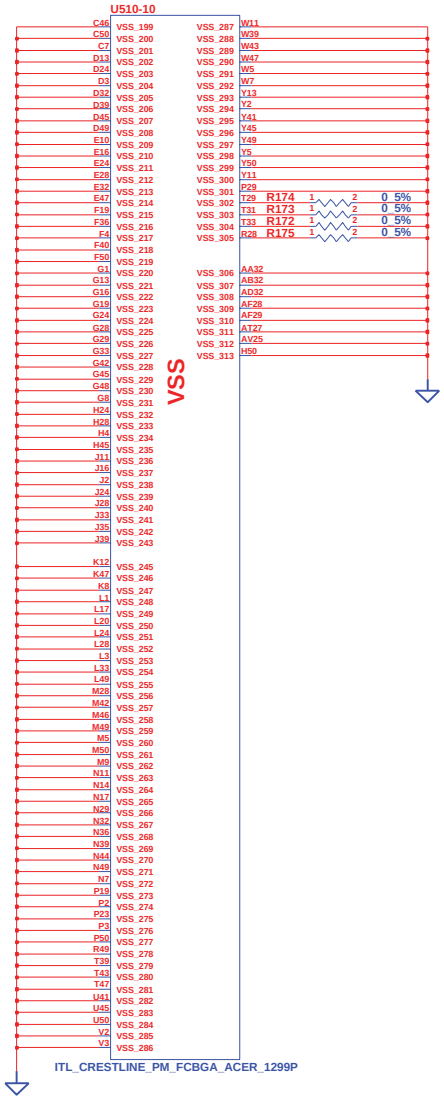

INVENTEC			
TITLE TETON Crestline-7			
SIZE A3	CODE CS	DOC. NUMBER Model_No	REV AX1
CHANGE by RDEE3	10-Dec-2007	SHEET 25 OF 54	

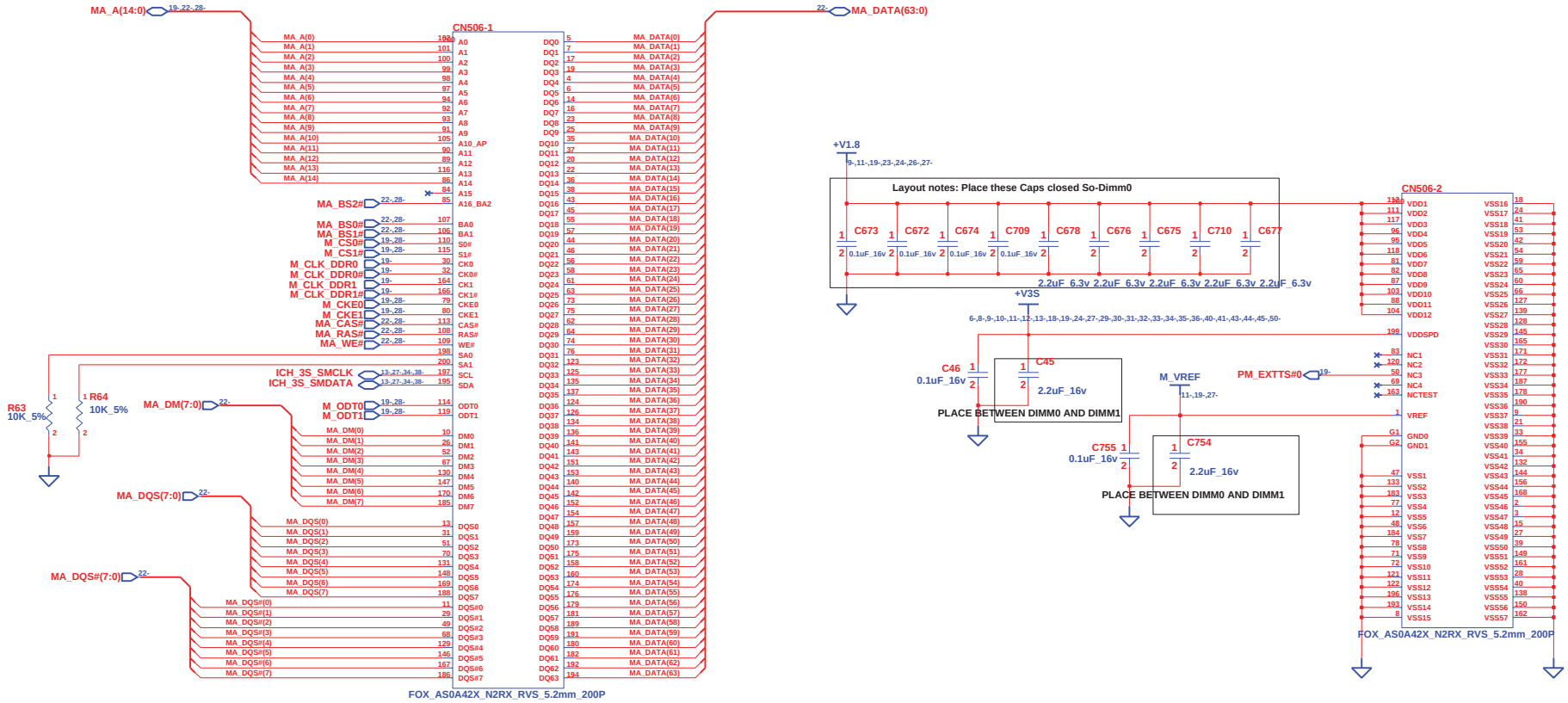

DDR2 SODIMM0

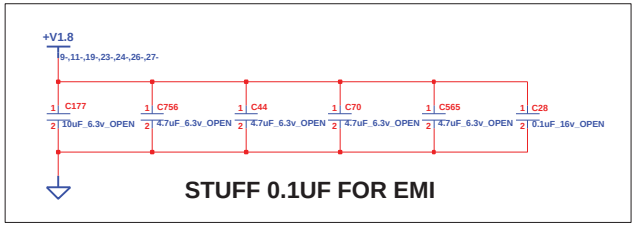

CHANGE by	RDEE3	11-Dec-2007	

INVENTEC

TITLE: TETON DDR2-DIMM-0

SIZE	CODE	DOC. NUMBER	REV
A3	CS	Model_No	AX1

SHEET 26 OF 54

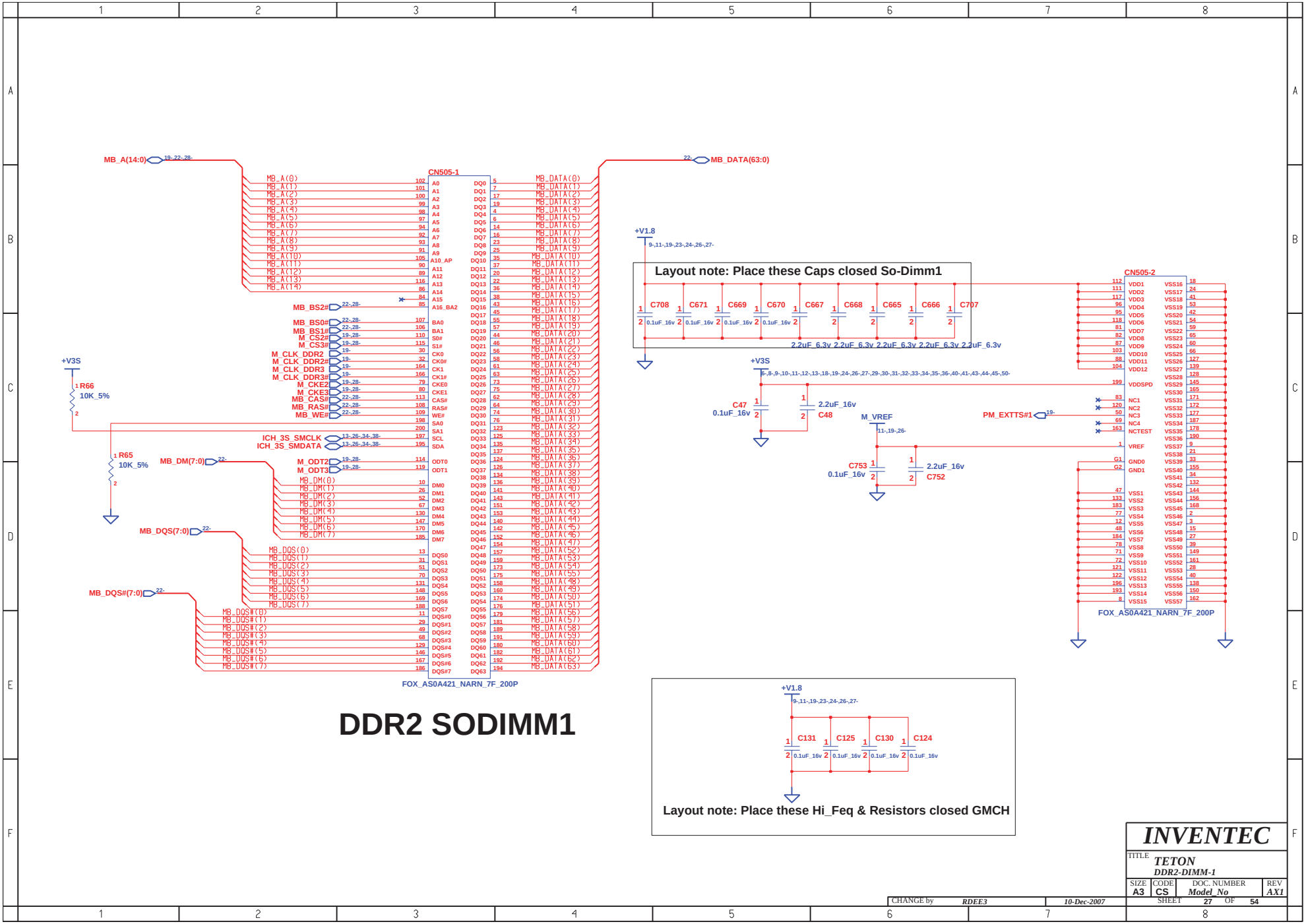

DDR2 SODIMM1

INVENTEC			
TITLE	TETON DDR2-DIMM-1		
SIZE A3	CODE CS	DOC. NUMBER Model_No	REV AX1
CHANGE by RDEE3	10-Dec-2007	SHEET 27 OF 54	

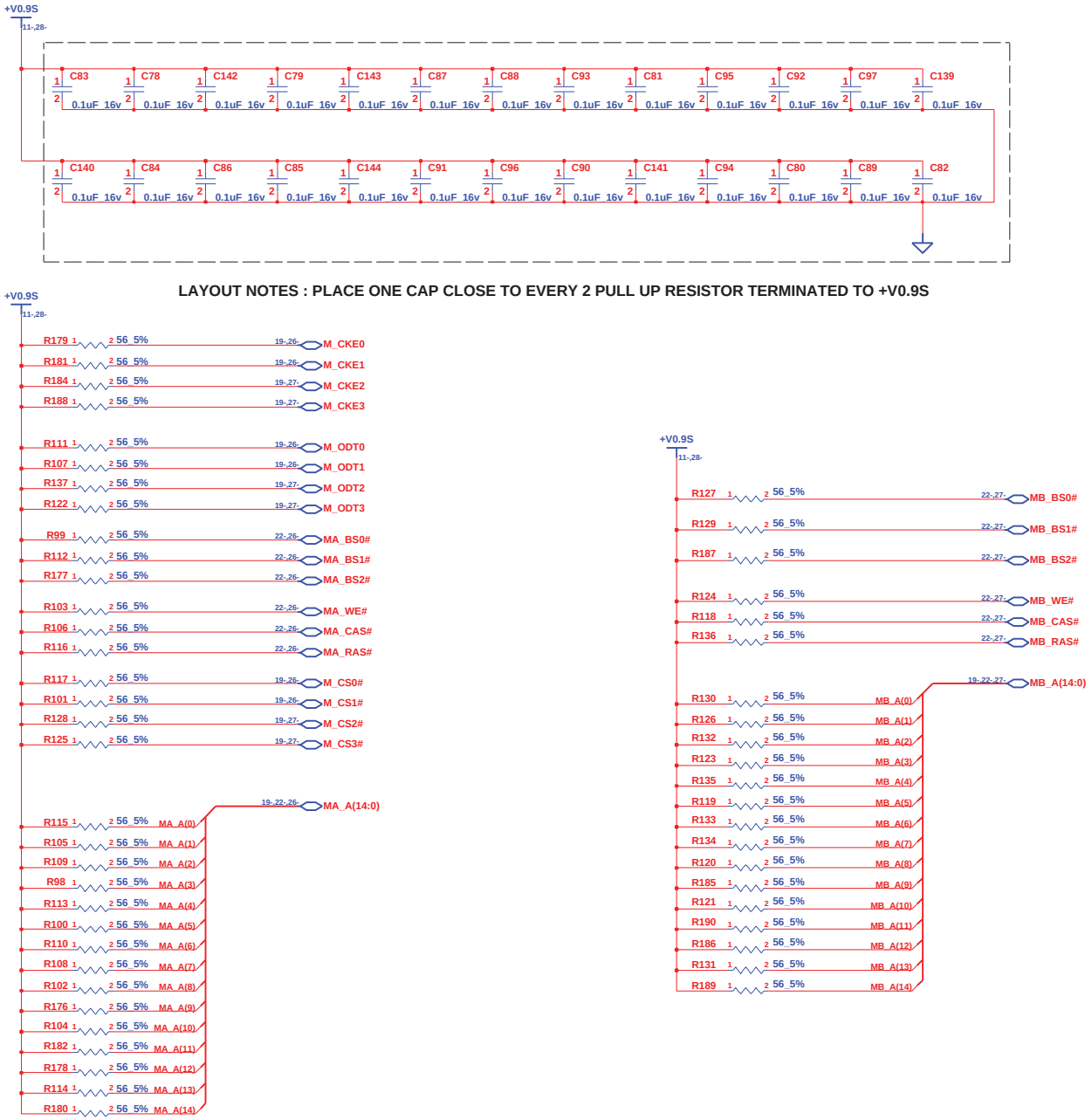

INVENTEC			
TITLE TETON DDR2-DAMPING			
SIZE A3	CODE CS	DOC. NUMBER Model_No	REV AX1
CHANGE by RDEE3	10-Dec-2007	SHEET 28 OF 54	

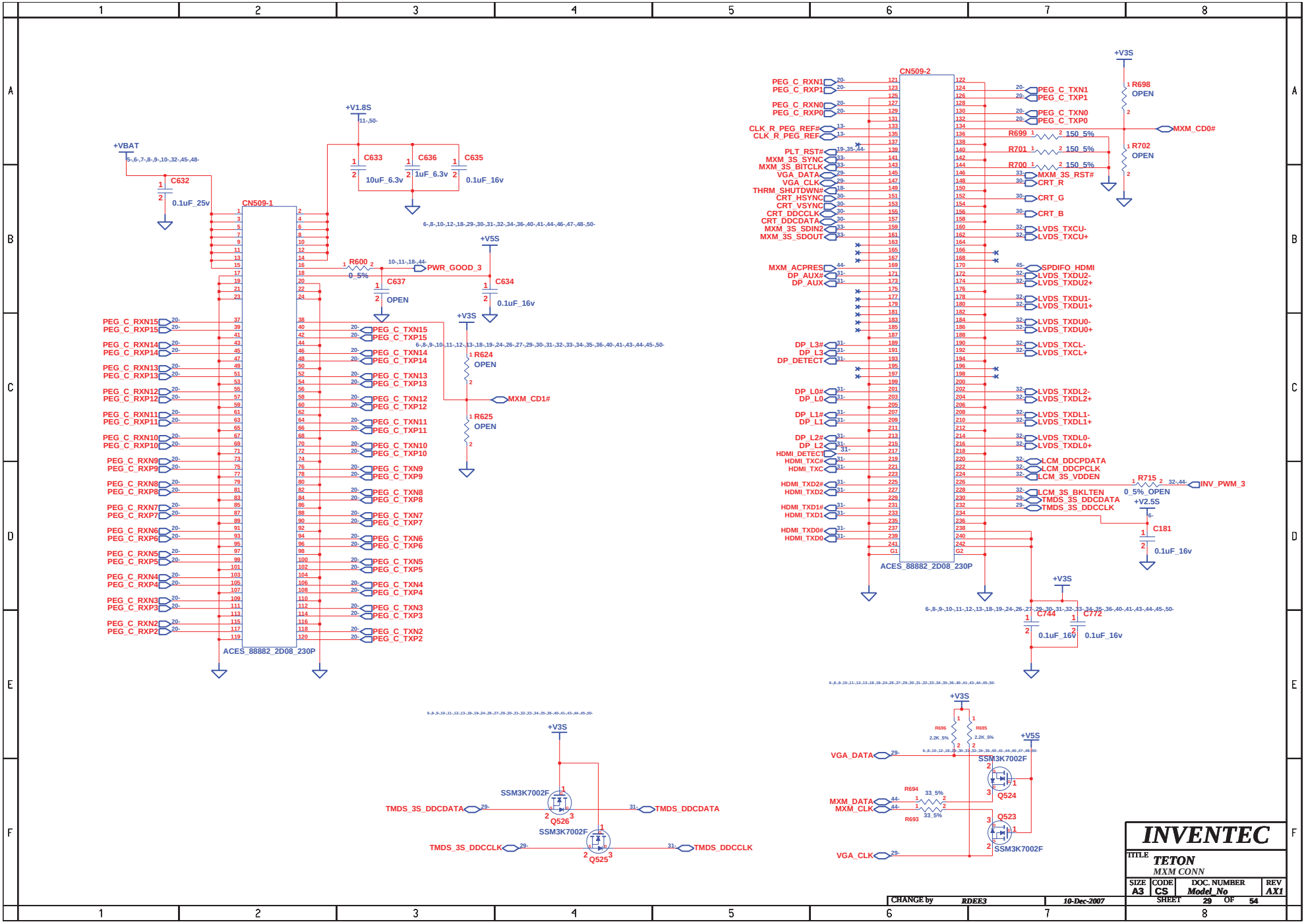

INVENTEC

TITLE TETON
MXM CONN

SIZE	CODE	DOC. NUMBER	REV
A3	CS	Model_No	AX1

CHANGE by RDEE3 10-Dec-2007

SHEET 29 OF 54

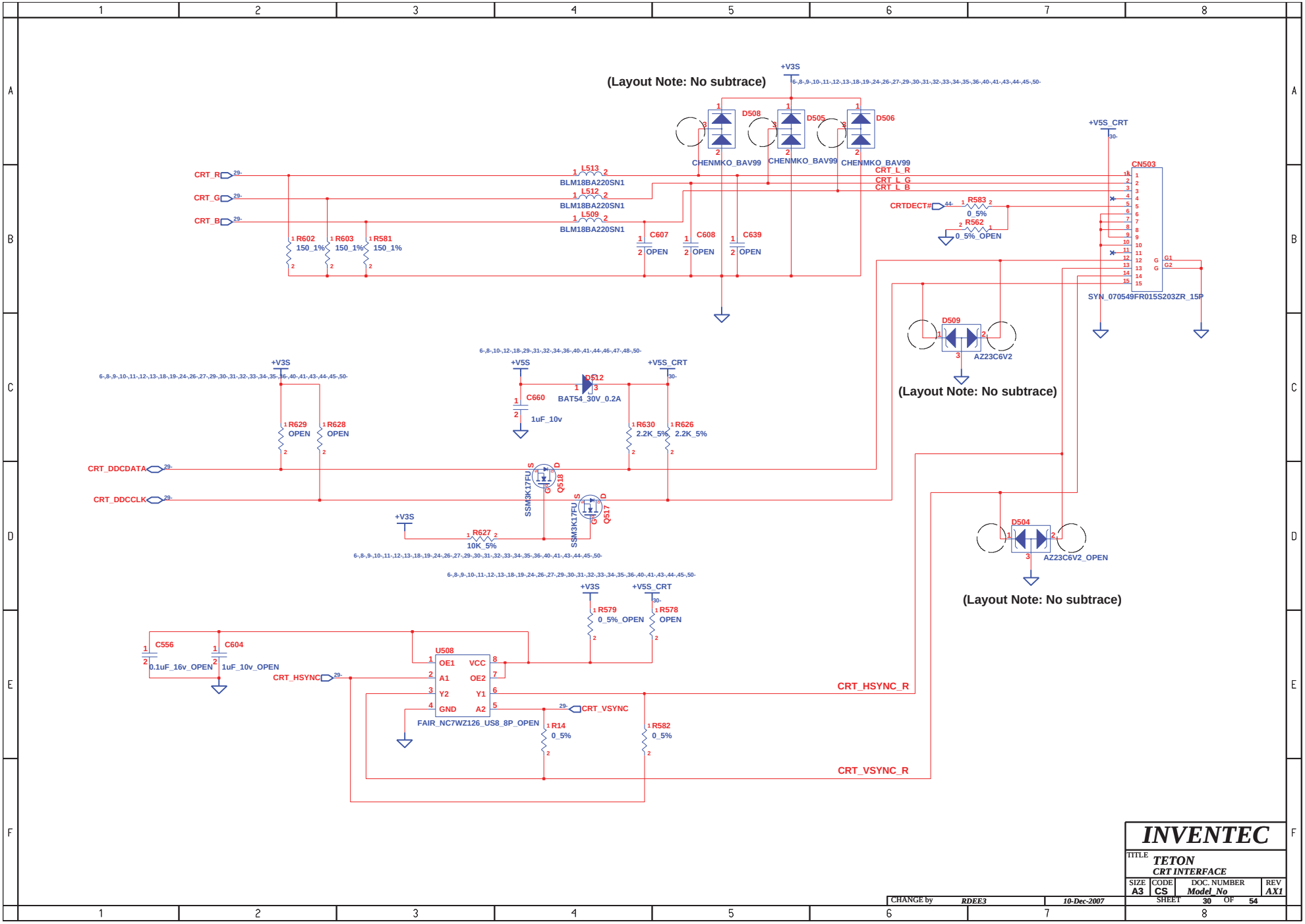
(Layout Note: No subtrace)
+V3S
D508
D505
D506
CHENMKO_BAV99
CRT_R
CRT_G
CRT_B
L513
L512
L509
BLM18BA220SN1
R602
R603
R581
150_1%
C607
C608
C639
OPEN
CRT_L_R
CRT_L_G
CRT_L_B
+V5S_CRT
CN503
CRTDECT#
R583
0_5%
R562
0_5%_OPEN
SYN_070549FR015S203ZR_15P
D509
AZ23C6V2
(Layout Note: No subtrace)
+V5S
D512
BAT54_30V_0.2A
C660
1uF_10v
R629
R628
R630
2.2K_5%
R626
2.2K_5%
CRT_DDCDATA
CRT_DDCCLK
SSM3K17FU
Q518
Q517
R627
10K_5%
D504
AZ23C6V2_OPEN
(Layout Note: No subtrace)
R579
0_5%_OPEN
R578
OPEN
C556
0.1uF_16v_OPEN
C604
1uF_10v_OPEN
U508
OE1
A1
Y2
GND
VCC
OE2
Y1
A2
FAIR_NC7WZ126_US8_8P_OPEN
CRT_HSYNC
CRT_VSYNC
R14
0_5%
R582
0_5%
CRT_HSYNC_R
CRT_VSYNC_R
INVENTEC
TITLE
TETON
CRT INTERFACE
SIZE A3
CODE CS
DOC. NUMBER Model_No
REV AX1
CHANGE by RDEE3
10-Dec-2007
SHEET 30 OF 54

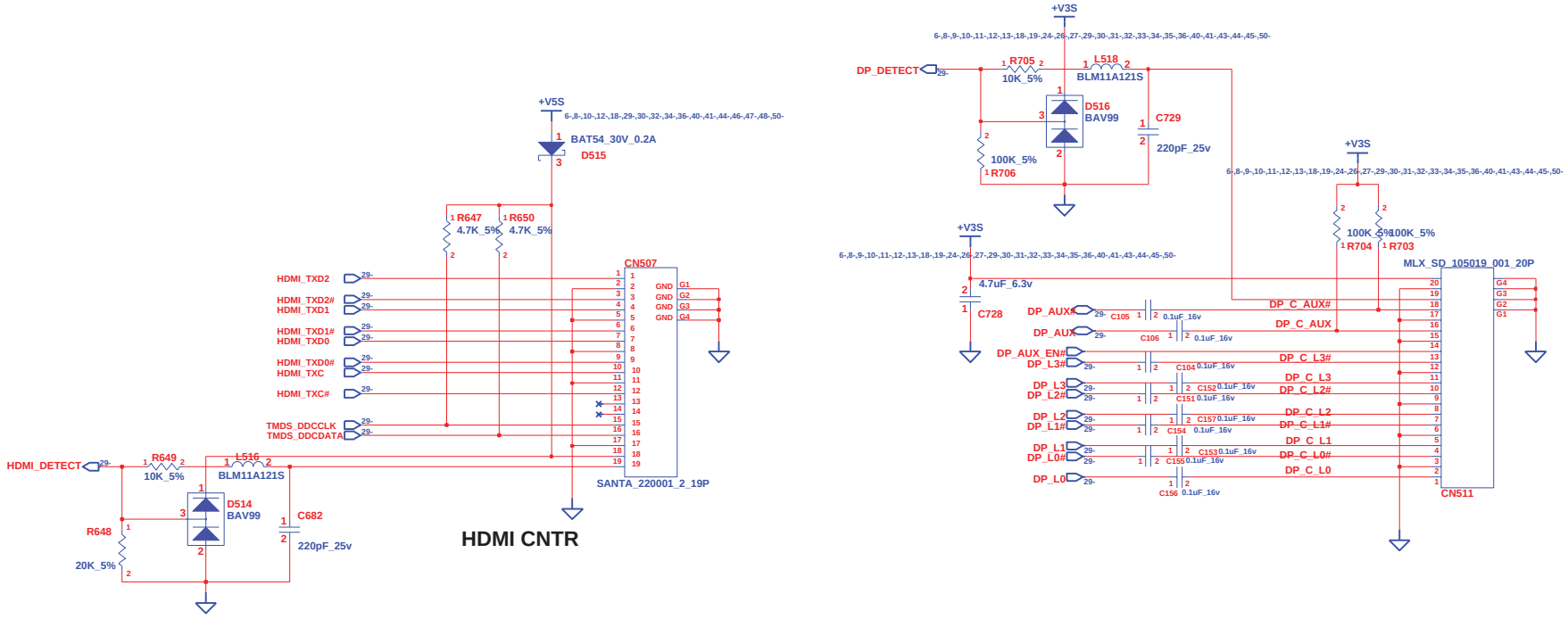

INVENTEC			
TITLE TETON HDMI			
SIZE A3	CODE CS	DOC. NUMBER Model_No	REV AX1
CHANGE by RDEE3	10-Dec-2007	SHEET 31 OF 54	

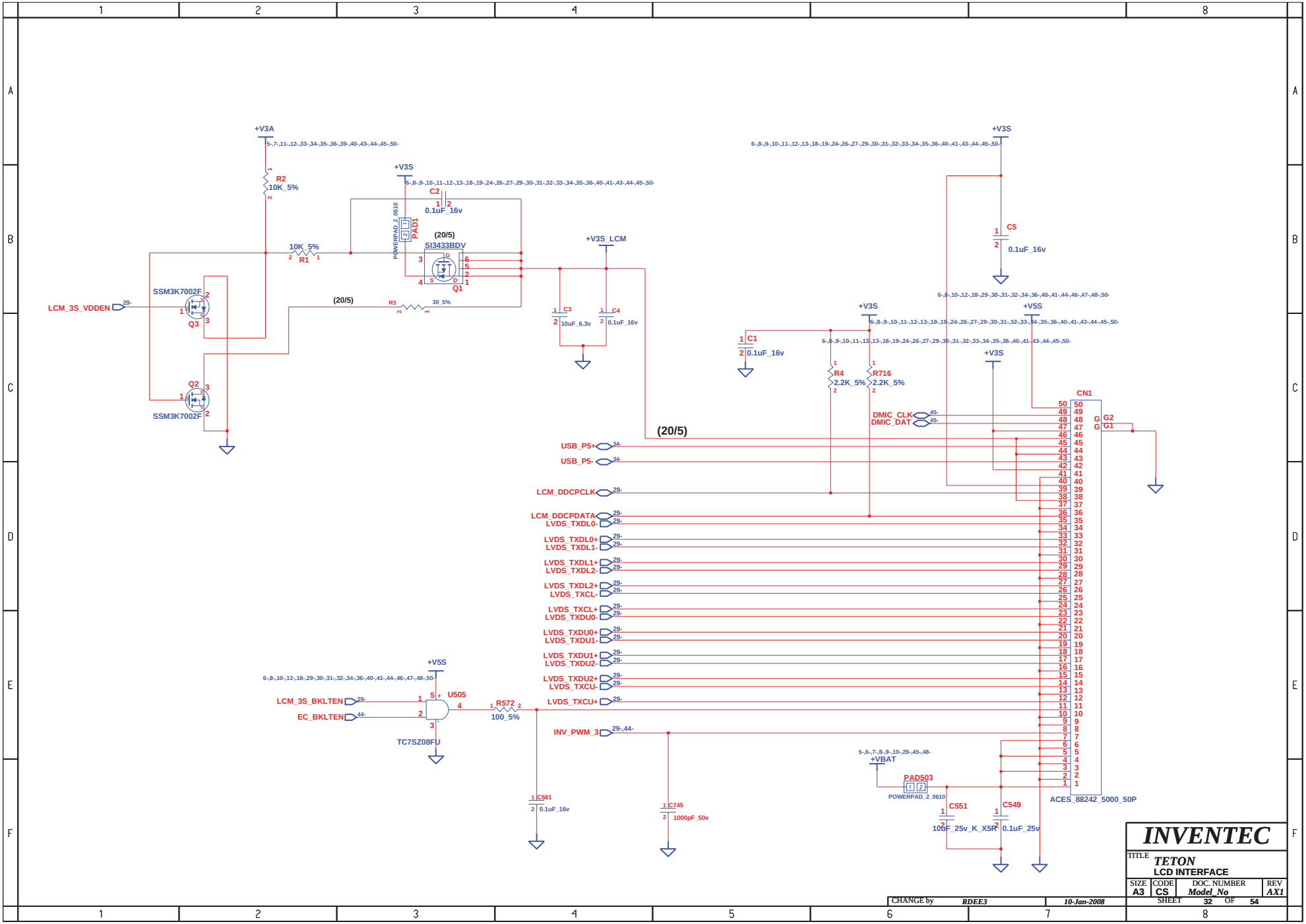
+V3A
R2
10K_5%
+V3S
C2
0.1uF_16v
PAD1
POWERPAD_2_0610
(20/5)
SI3433BDV
Q1
10K_5%
R1
LCM_3S_VDDEN
SSM3K7002F
Q3
Q2
SSM3K7002F
(20/5)
R3
30_5%
+V3S_LCM
C3
10uF_6.3v
C4
0.1uF_16v
+V3S
C5
0.1uF_16v
+V3S
C1
0.1uF_16v
+V3S
R4
2.2K_5%
R716
2.2K_5%
+V5S
+V3S
CN1
DMIC_CLK
DMIC_DAT
(20/5)
USB_P5+
USB_P5-
LCM_DDCPCLK
LCM_DDCPDATA
LVDS_TXDL0-
LVDS_TXDL0+
LVDS_TXDL1-
LVDS_TXDL1+
LVDS_TXDL2-
LVDS_TXDL2+
LVDS_TXCL-
LVDS_TXCL+
LVDS_TXDU0-
LVDS_TXDU0+
LVDS_TXDU1-
LVDS_TXDU1+
LVDS_TXDU2-
LVDS_TXDU2+
LVDS_TXCU-
LVDS_TXCU+
INV_PWM_3
G2
G1
ACES_88242_5000_50P
+V5S
LCM_3S_BKLTEN
EC_BKLTEN
U505
TC7SZ08FU
R572
100_5%
C581
0.1uF_16v
C745
1000pF_50v
+VBAT
PAD503
POWERPAD_2_0610
C551
100uF_25v_K_X5R
C549
0.1uF_25v
INVENTEC
TITLE
TETON
LCD INTERFACE
SIZE A3
CODE CS
DOC. NUMBER Model_No
REV AX1
SHEET 32 OF 54
CHANGE by RDEE3
10-Jan-2008

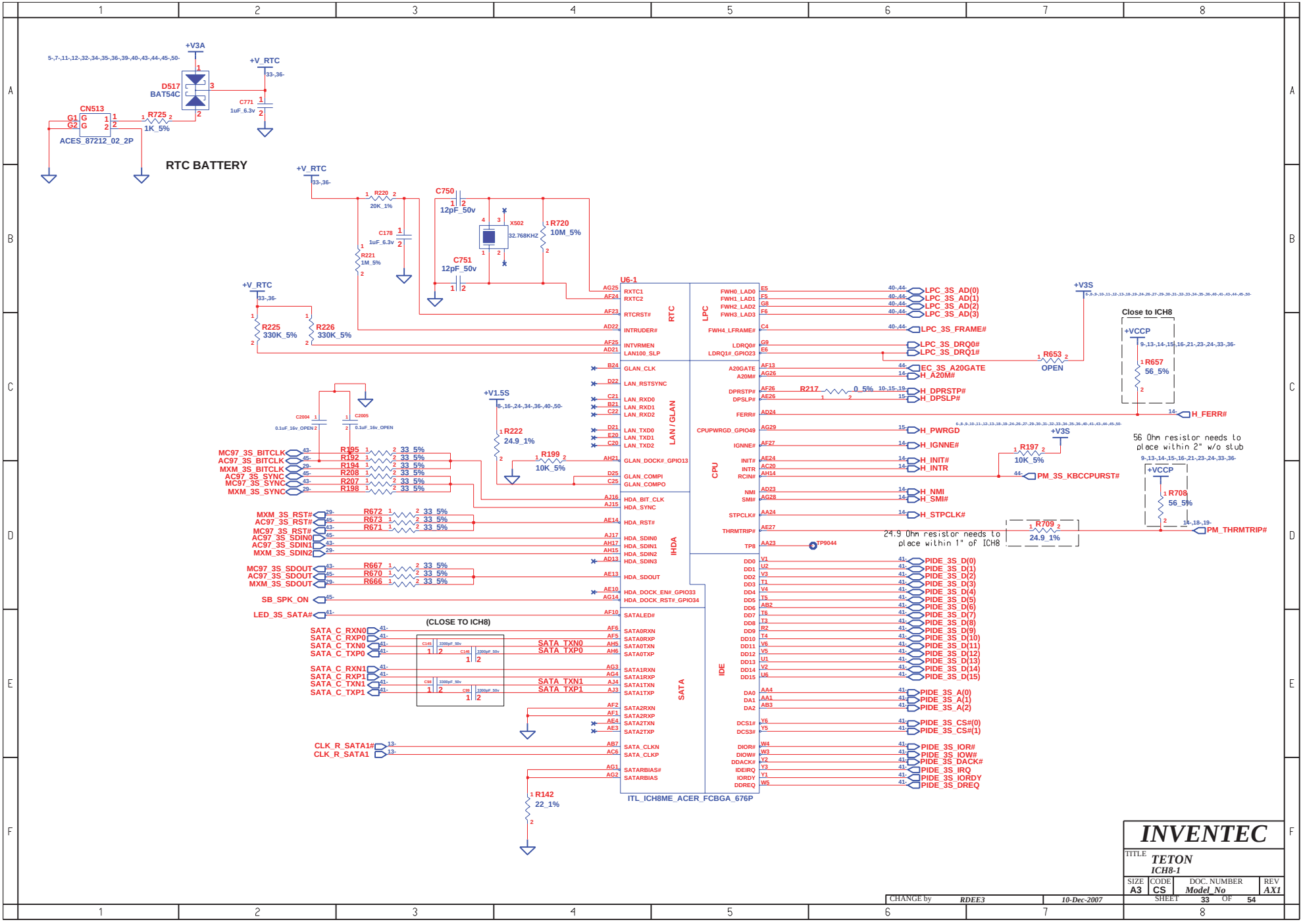

INVENTEC

TITLE TETON
ICH8-1

SIZE	CODE	DOC. NUMBER	REV
A3	CS	Model_No	AX1

CHANGE by RDEE3 10-Dec-2007 SHEET 33 OF 54

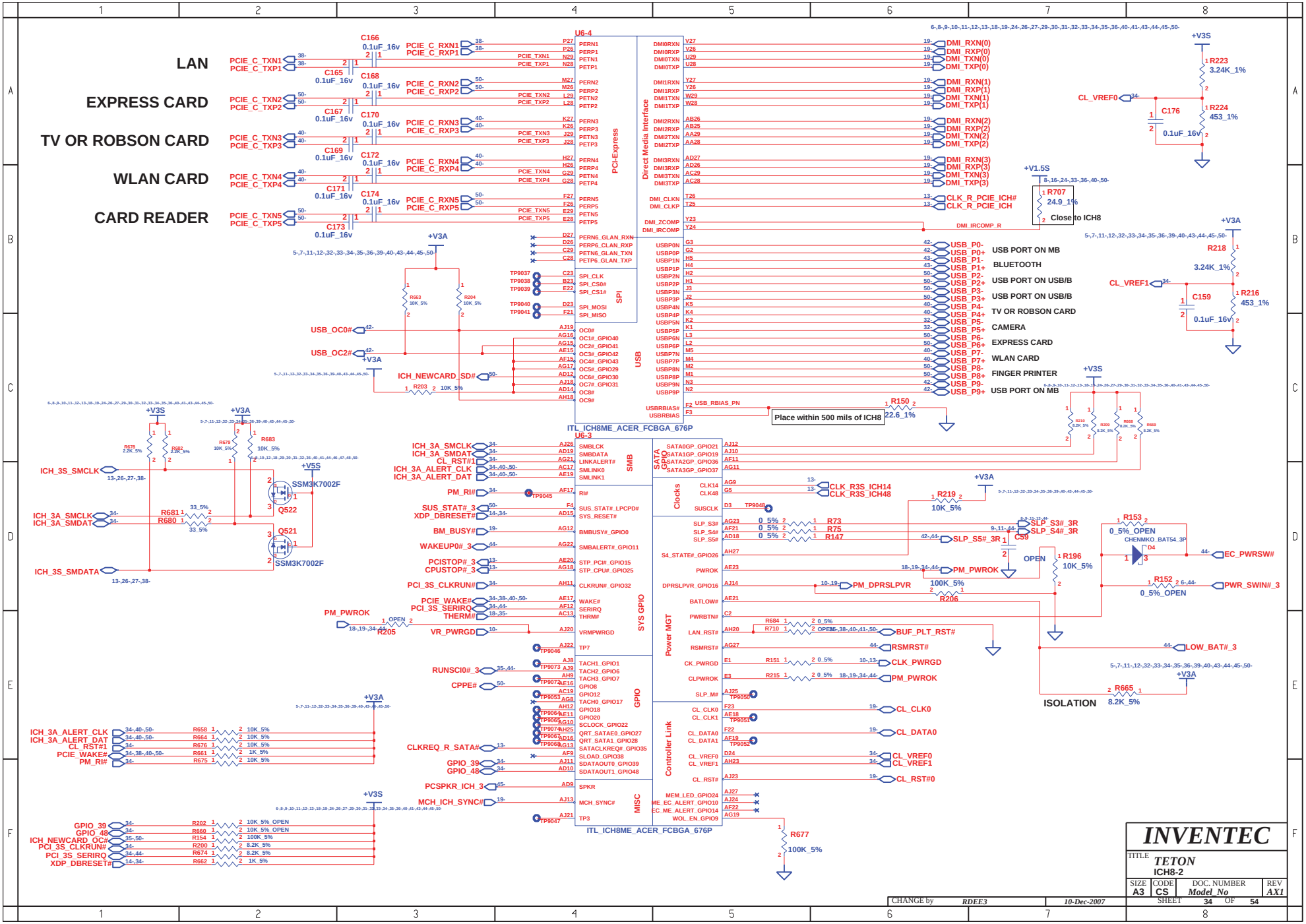
LAN
EXPRESS CARD
TV OR ROBSON CARD
WLAN CARD
CARD READER
U6-4
PCI-Express
Direct Media Interface
SPI
USB
ITL_ICH8ME_ACER_FCBGA_676P
USB PORT ON MB
BLUETOOTH
USB PORT ON USB/B
USB PORT ON USB/B
TV OR ROBSON CARD
CAMERA
EXPRESS CARD
WLAN CARD
FINGER PRINTER
USB PORT ON MB
Close to ICH8
Place within 500 mils of ICH8
U6-3
SMB
SATA GPIO
Clocks
Power MGT
SYS GPIO
GPIO
Controller Link
MISC
ITL_ICH8ME_ACER_FCBGA_676P
ISOLATION
INVENTEC
TITLE
TETON
ICH8-2
SIZE A3
CODE CS
DOC. NUMBER Model_No
REV AX1
CHANGE by RDEE3
10-Dec-2007
SHEET 34 OF 54

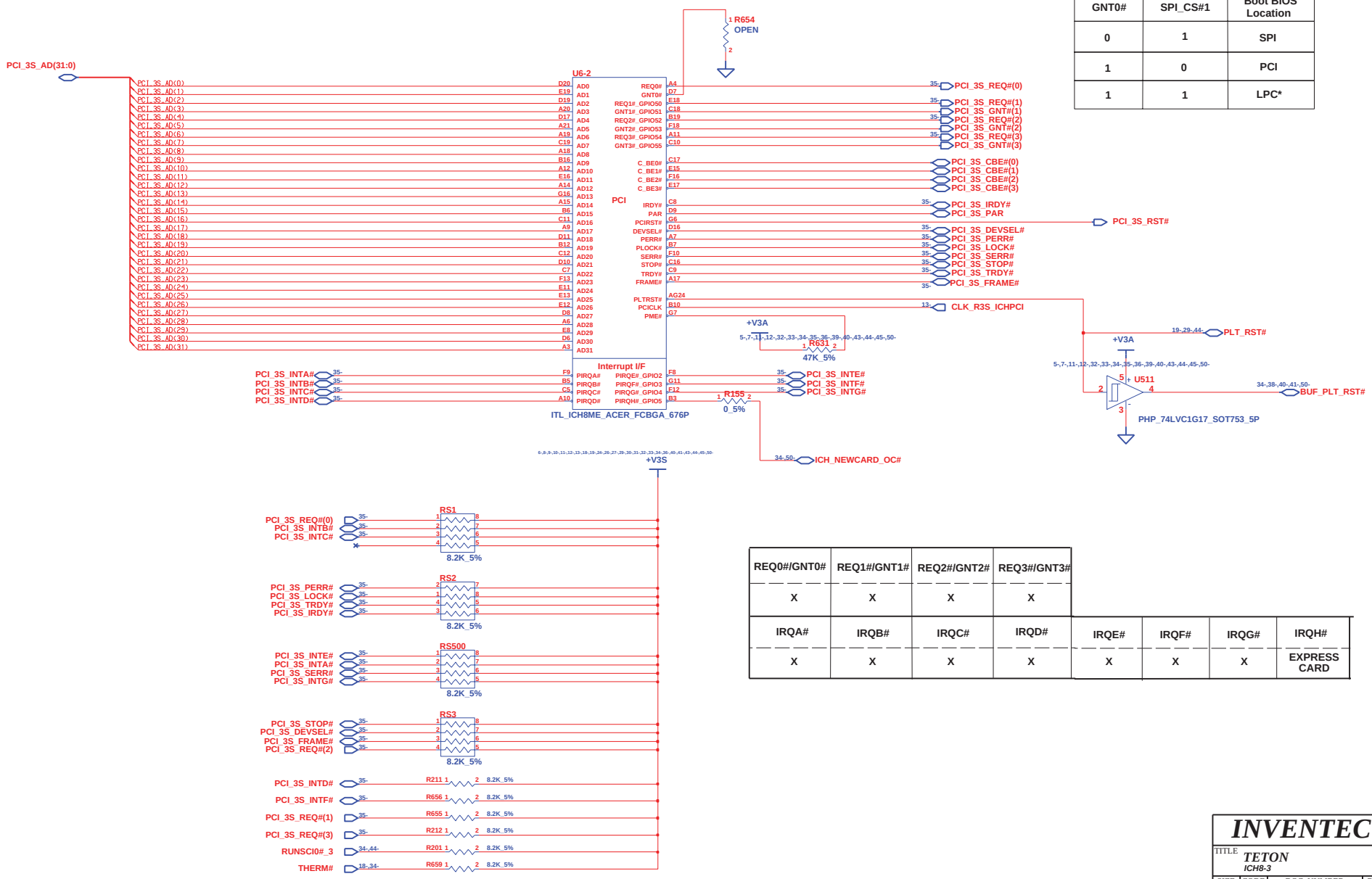

BOOT BIOS STRAP

GNT0#	SPI_CS#1	Boot BIOS Location
0	1	SPI
1	0	PCI
1	1	LPC*

REQ0#/GNT0#	REQ1#/GNT1#	REQ2#/GNT2#	REQ3#/GNT3#
X	X	X	X

IRQA#	IRQB#	IRQC#	IRQD#	IRQE#	IRQF#	IRQG#	IRQH#
X	X	X	X	X	X	X	EXPRESS CARD

INVENTEC

TITLE: TETON
ICH8-3

SIZE	CODE	DOC. NUMBER	REV
A3	CS	Model_No	AX1

CHANGE by RDEE3 | 10-Dec-2007 | SHEET 35 OF 54

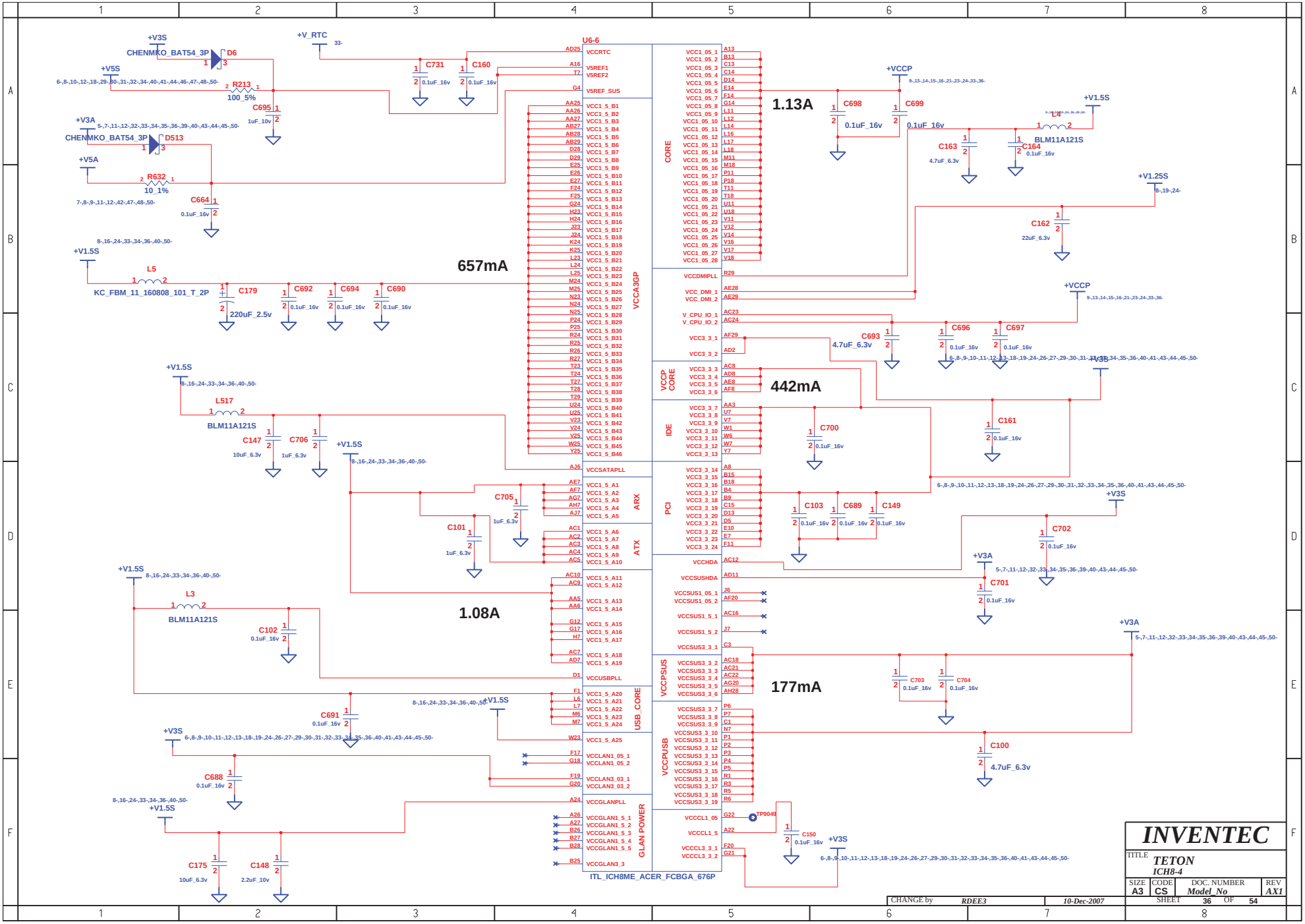

INVENTEC			
TITLE	TETON ICH8-4		
SIZE A3	CODE CS	DOC. NUMBER Model_No	REV AX1
CHANGE by RDEE3	10-Dec-2007	SHEET 36 OF 54	

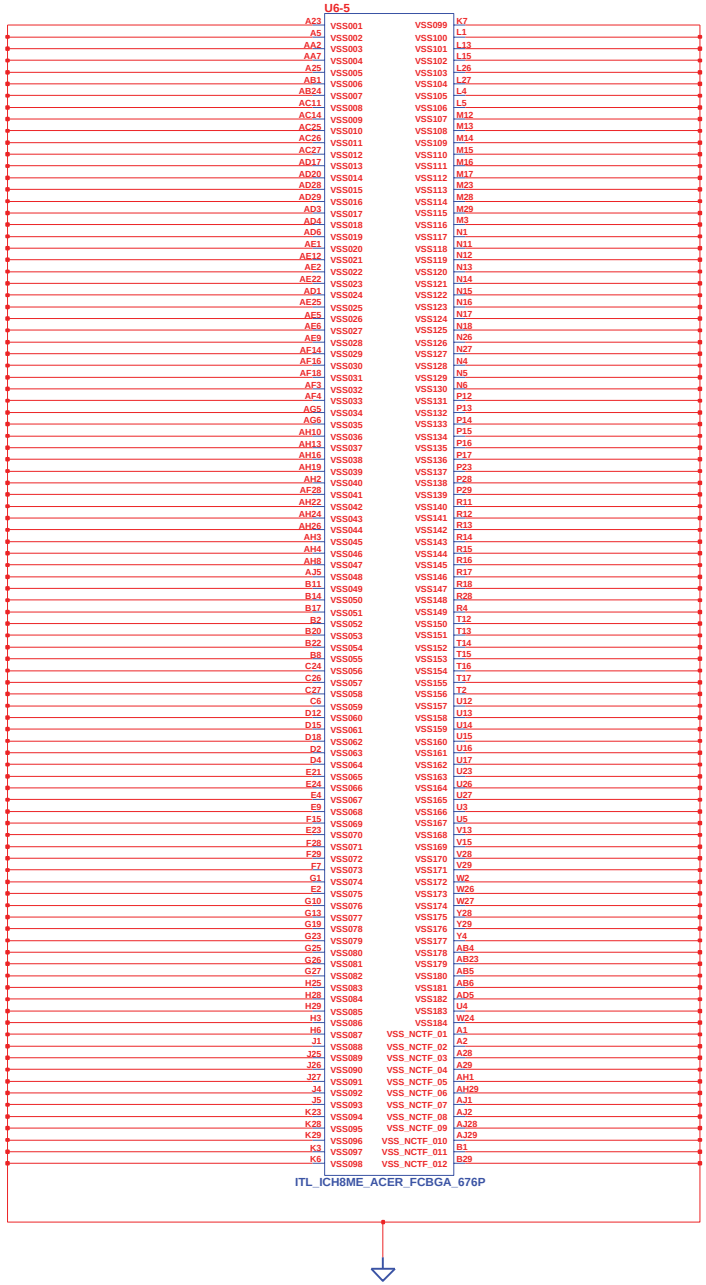

CHANGE by	RDEE3	10-Dec-2007	

INVENTEC

TITLE **TETON**
ICH8-5

SIZE	CODE	DOC. NUMBER	REV
A3	CS	Model_No	AX1

SHEET 37 OF 54

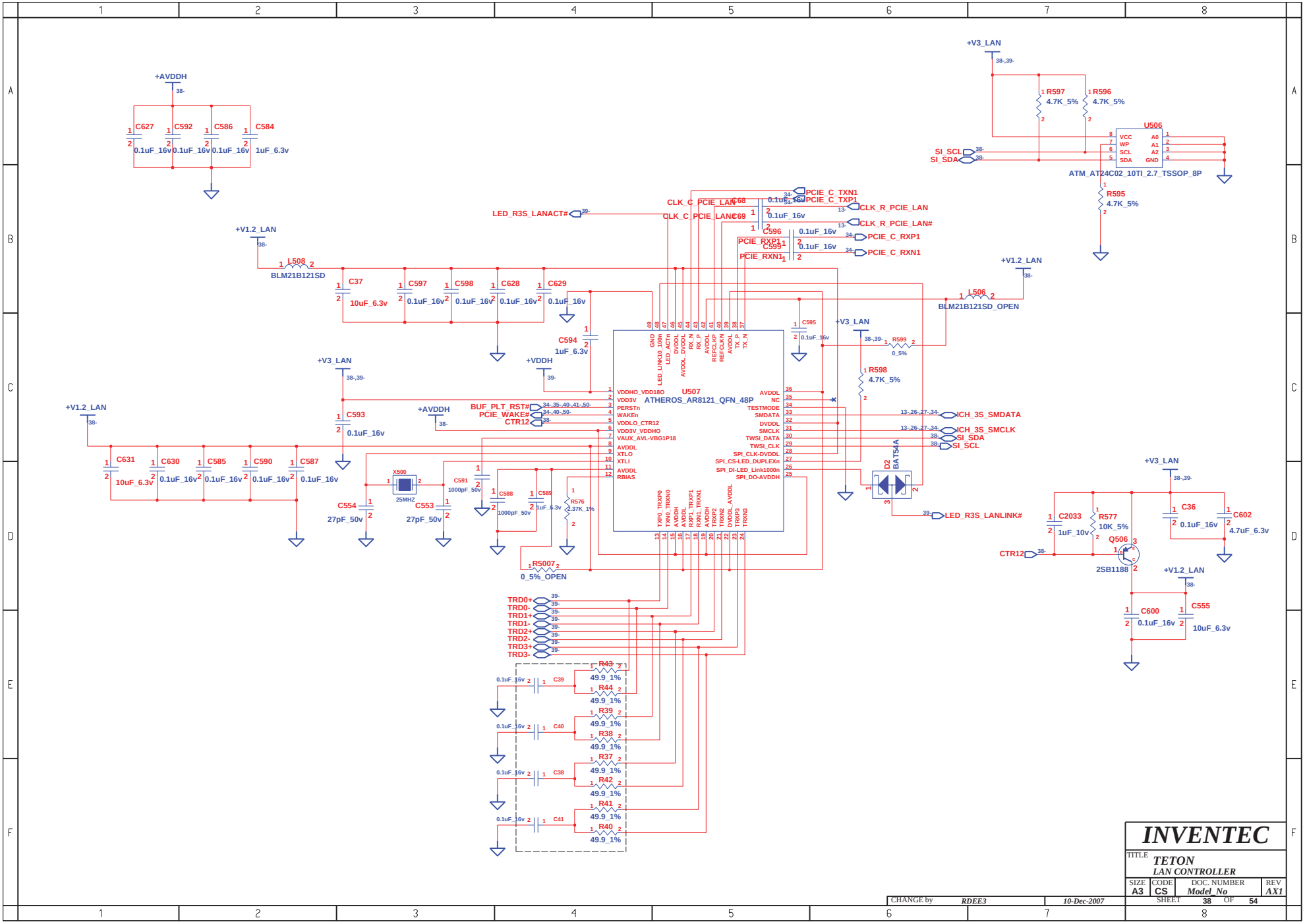
+AVDDH
C627 0.1uF_16v
C592 0.1uF_16v
C586 0.1uF_16v
C584 1uF_6.3v
+V3_LAN
R597 4.7K_5%
R596 4.7K_5%
U506
ATM_AT24C02_10TI_2.7_TSSOP_8P
SI_SCL
SI_SDA
R595 4.7K_5%
+V1.2_LAN
L508 BLM21B121SD
C37 10uF_6.3v
C597 0.1uF_16v
C598 0.1uF_16v
C628 0.1uF_16v
C629 0.1uF_16v
C594 1uF_6.3v
LED_R3S_LANACT#
CLK_C_PCIE_LAN
CLK_C_PCIE_LAN#
C568 0.1uF_16v
C569 0.1uF_16v
C596 0.1uF_16v
C599 0.1uF_16v
PCIE_RXP1
PCIE_RXN1
PCIE_C_TXN1
PCIE_C_TXP1
CLK_R_PCIE_LAN
CLK_R_PCIE_LAN#
PCIE_C_RXP1
PCIE_C_RXN1
+V1.2_LAN
L506 BLM21B121SD_OPEN
C595 0.1uF_16v
R599 0_5%
R598 4.7K_5%
+VDDH
U507
ATHEROS_AR8121_QFN_48P
VDDHO_VDD18O
VDD3V
PERSTn
WAKEn
VDDLO_CTR12
VDD3V_VDDHO
VAUX_AVL-VBG1P18
AVDDL
XTLO
XTLI
AVDDL
RBIAS
AVDDL
NC
TESTMODE
SMDATA
DVDDL
SMCLK
TWSI_DATA
TWSI_CLK
SPI_CLK-DVDDL
SPI_CS-LED_DUPLEXn
SPI_DI-LED_Link1000n
SPI_DO-AVDDH
BUF_PLT_RST#
PCIE_WAKE#
CTR12
ICH_3S_SMDATA
ICH_3S_SMCLK
SI_SDA
SI_SCL
D2 BAT54A
LED_R3S_LANLINK#
+V1.2_LAN
C631 10uF_6.3v
C630 0.1uF_16v
C585 0.1uF_16v
C590 0.1uF_16v
C587 0.1uF_16v
C593 0.1uF_16v
X500 25MHZ
C554 27pF_50v
C553 27pF_50v
C591 1000pF_50v
C588 1000pF_50v
C589 1uF_6.3v
R576 2.37K_1%
R5007 0_5%_OPEN
C2033 1uF_10v
R577 10K_5%
Q506 2SB1188
CTR12
C36 0.1uF_16v
C602 4.7uF_6.3v
C600 0.1uF_16v
C555 10uF_6.3v
TRD0+
TRD0-
TRD1+
TRD1-
TRD2+
TRD2-
TRD3+
TRD3-
R43 49.9_1%
R44 49.9_1%
R39 49.9_1%
R38 49.9_1%
R37 49.9_1%
R42 49.9_1%
R41 49.9_1%
R40 49.9_1%
C39 0.1uF_16v
C40 0.1uF_16v
C38 0.1uF_16v
C41 0.1uF_16v
INVENTEC
TITLE TETON
LAN CONTROLLER
SIZE A3
CODE CS
DOC. NUMBER Model_No
REV AX1
CHANGE by RDEE3
10-Dec-2007
SHEET 38 OF 54

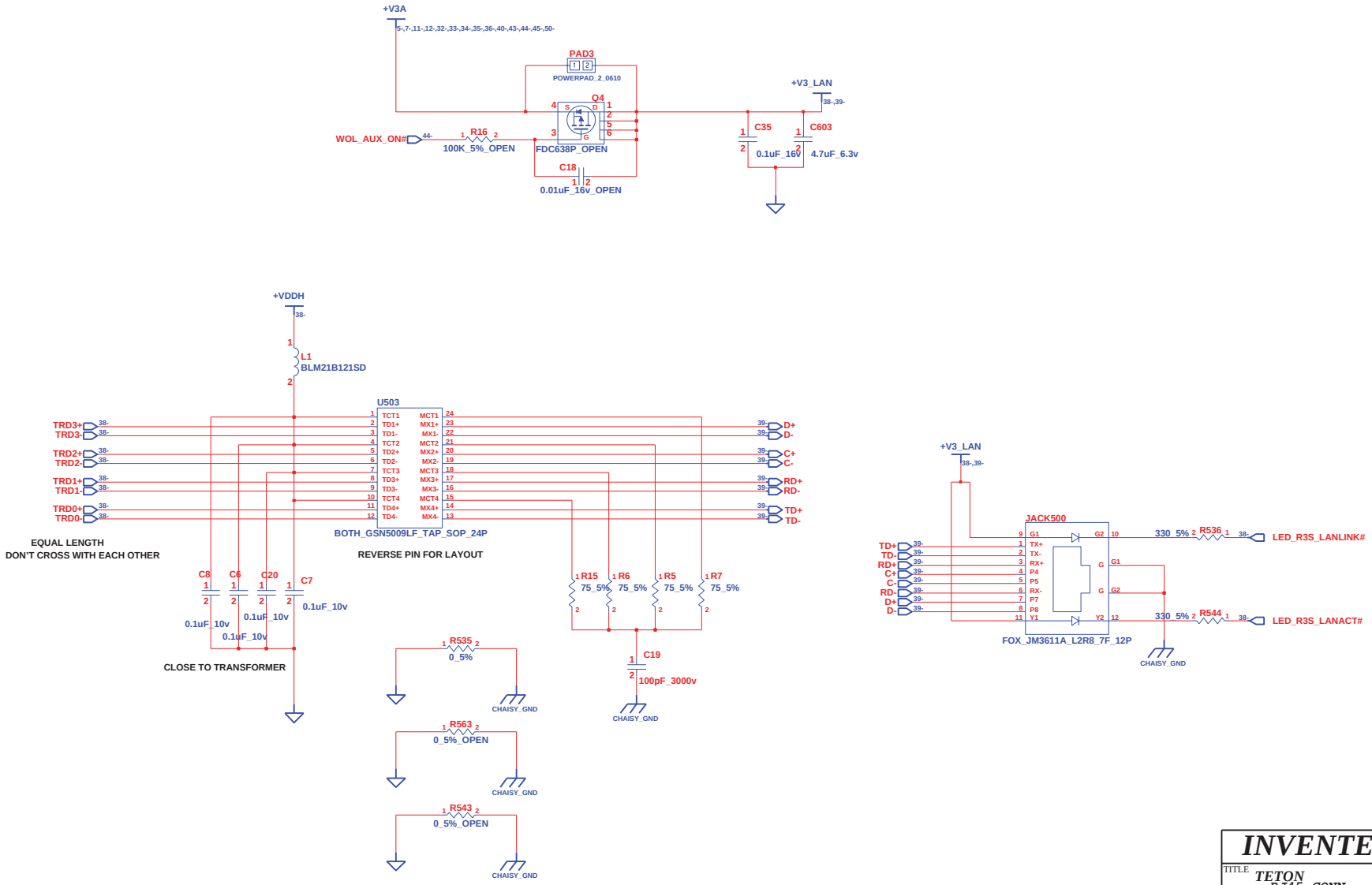

INVENTEC			
TITLE TETON RJ45 CONN			
SIZE A3	CODE CS	DOC. NUMBER Model_No	REV AX1
CHANGE by RDEE3	10-Dec-2007	SHEET 39 OF 54	

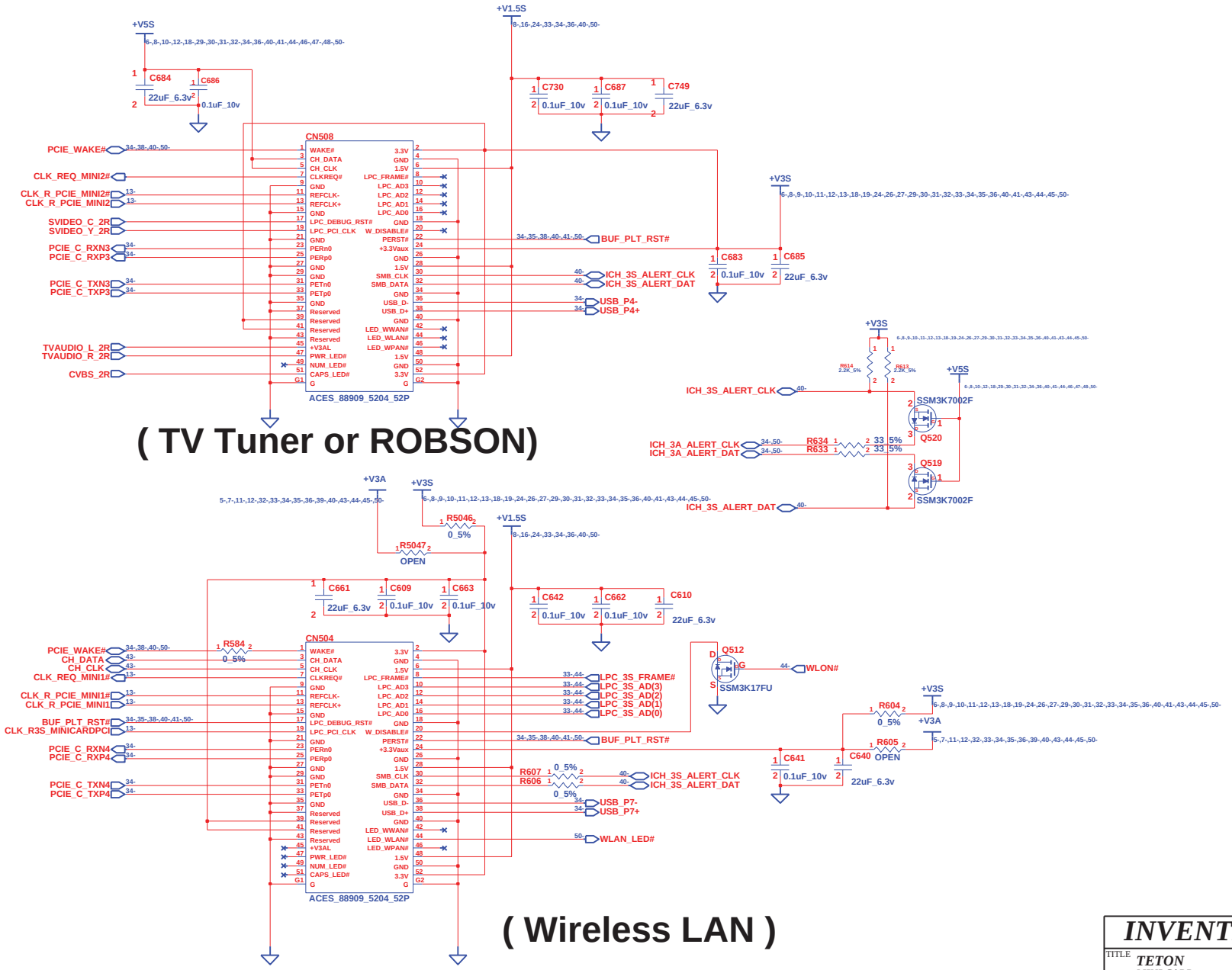

INVENTEC			
TITLE TETON MINI CARD			
SIZE A3	CODE CS	DOC. NUMBER Model_No	REV AX1
CHANGE by RDEE3	8-Jan-2008	SHEET 40 OF 54	

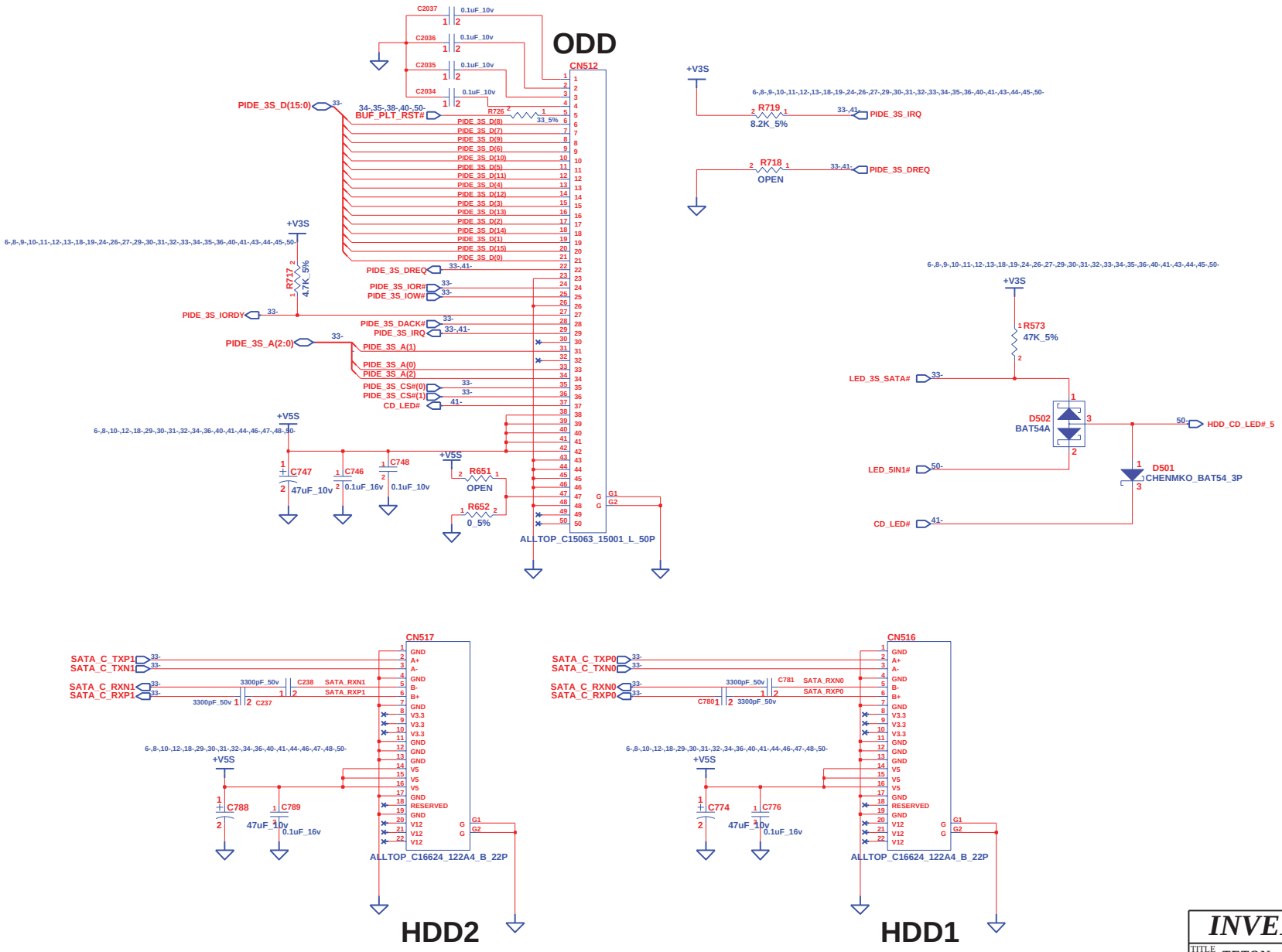

INVENTEC			
TITLE: TETON ODD & HDD CONN			
SIZE A3	CODE CS	DOC. NUMBER Model_No	REV AX1
CHANGE by RDEE3	10-Dec-2007	SHEET 41 OF 54	

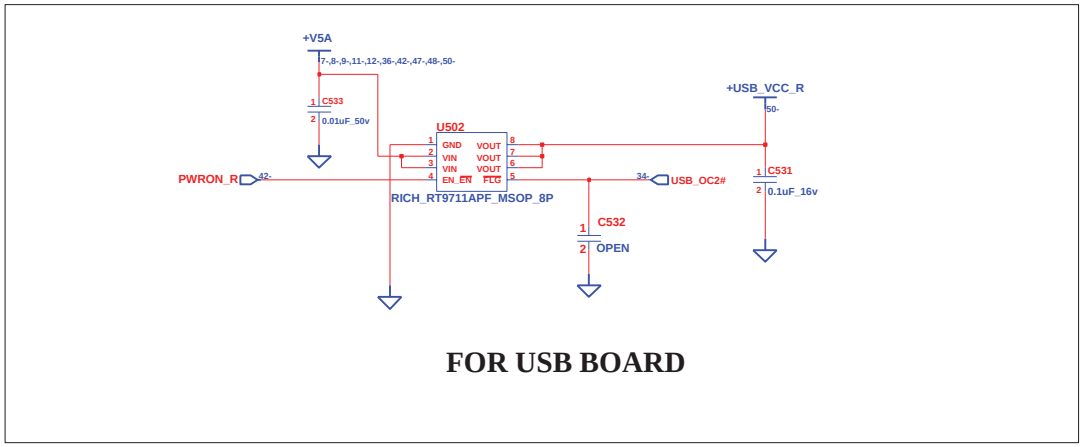

FOR USB BOARD

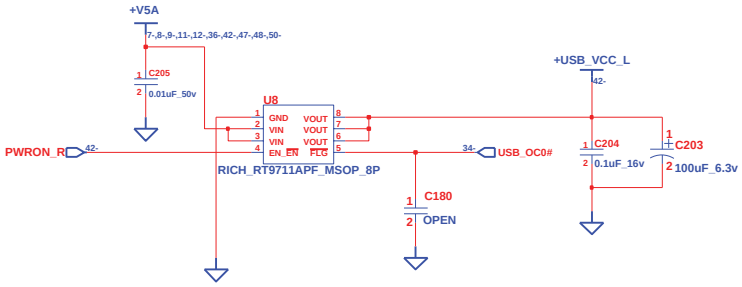

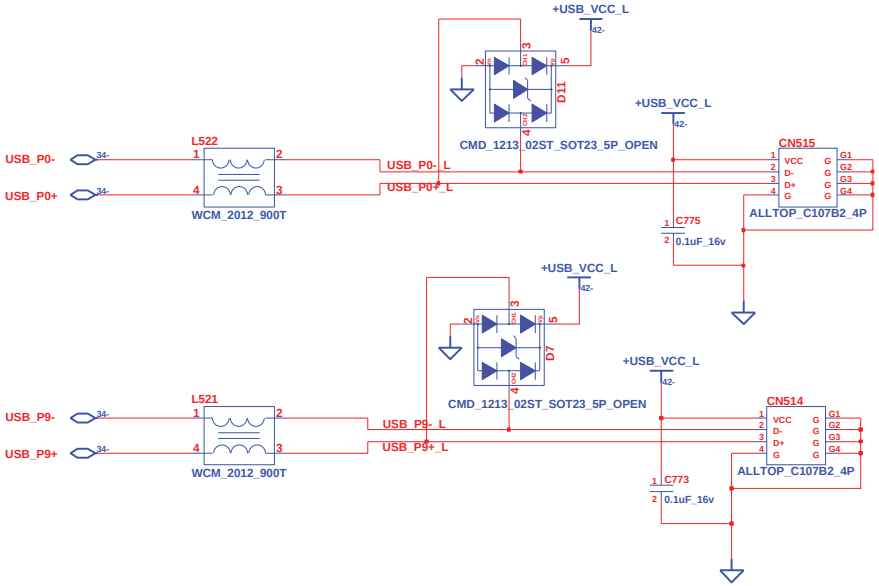

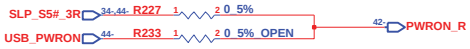

USB POWER STATE	S0	S3	S5
AC MODE	ON	ON	OFF
DC MODE	ON	ON	OFF

INVENTEC

TITLE: *TETON*
USB CONN

SIZE	CODE	DOC. NUMBER	REV
A3	CS	*Model_No*	*AX1*

CHANGE by *RDEE3* | *10-Dec-2007* | SHEET 42 OF 54

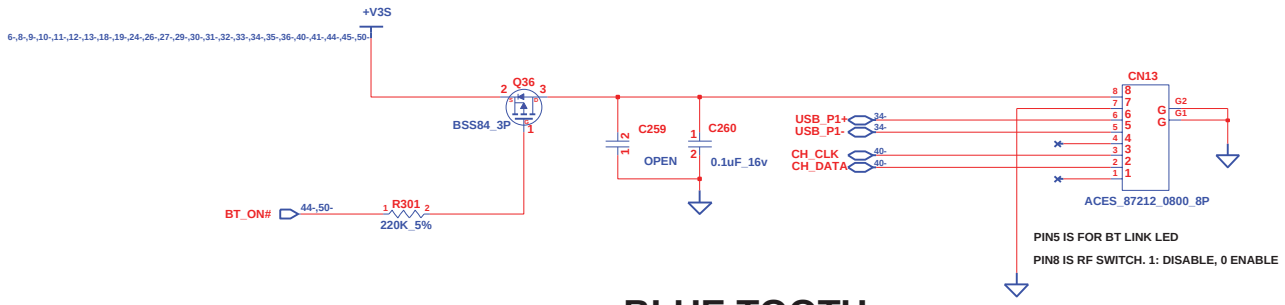

BLUE TOOTH

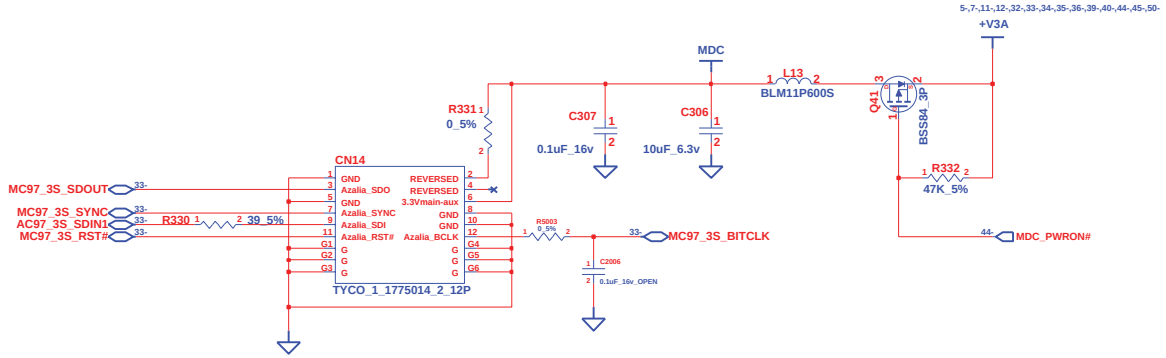

MDC

INVENTEC			
TITLE TETON BLUETOOTH			
SIZE A3	CODE CS	DOC. NUMBER Model_No	REV AX1
CHANGE by RDEE3	10-Dec-2007	SHEET 43 OF 54	

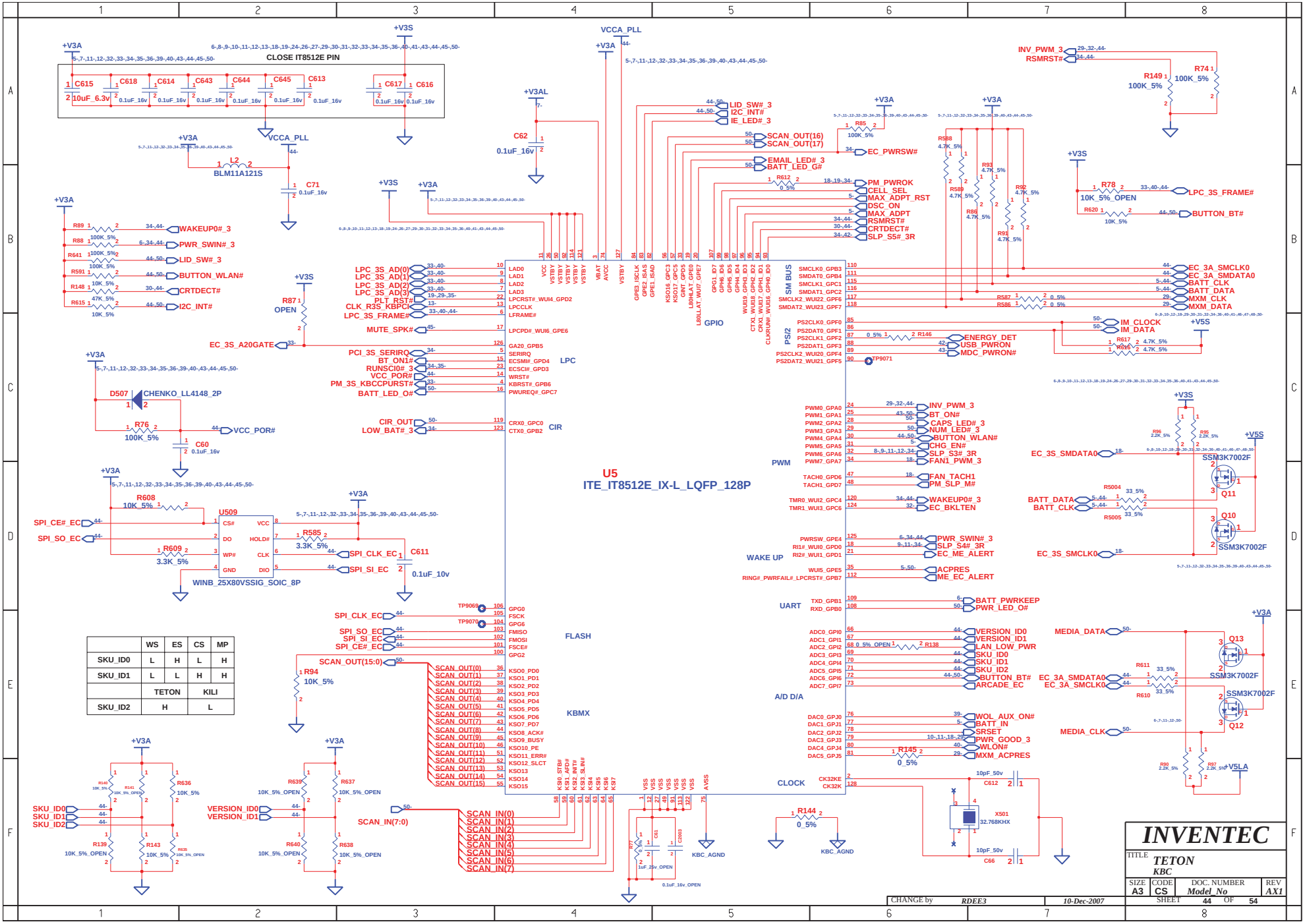

	WS	ES	CS	MP
SKU_ID0	L	H	L	H
SKU_ID1	L	L	H	H
	TETON		KILI	
SKU_ID2	H		L	

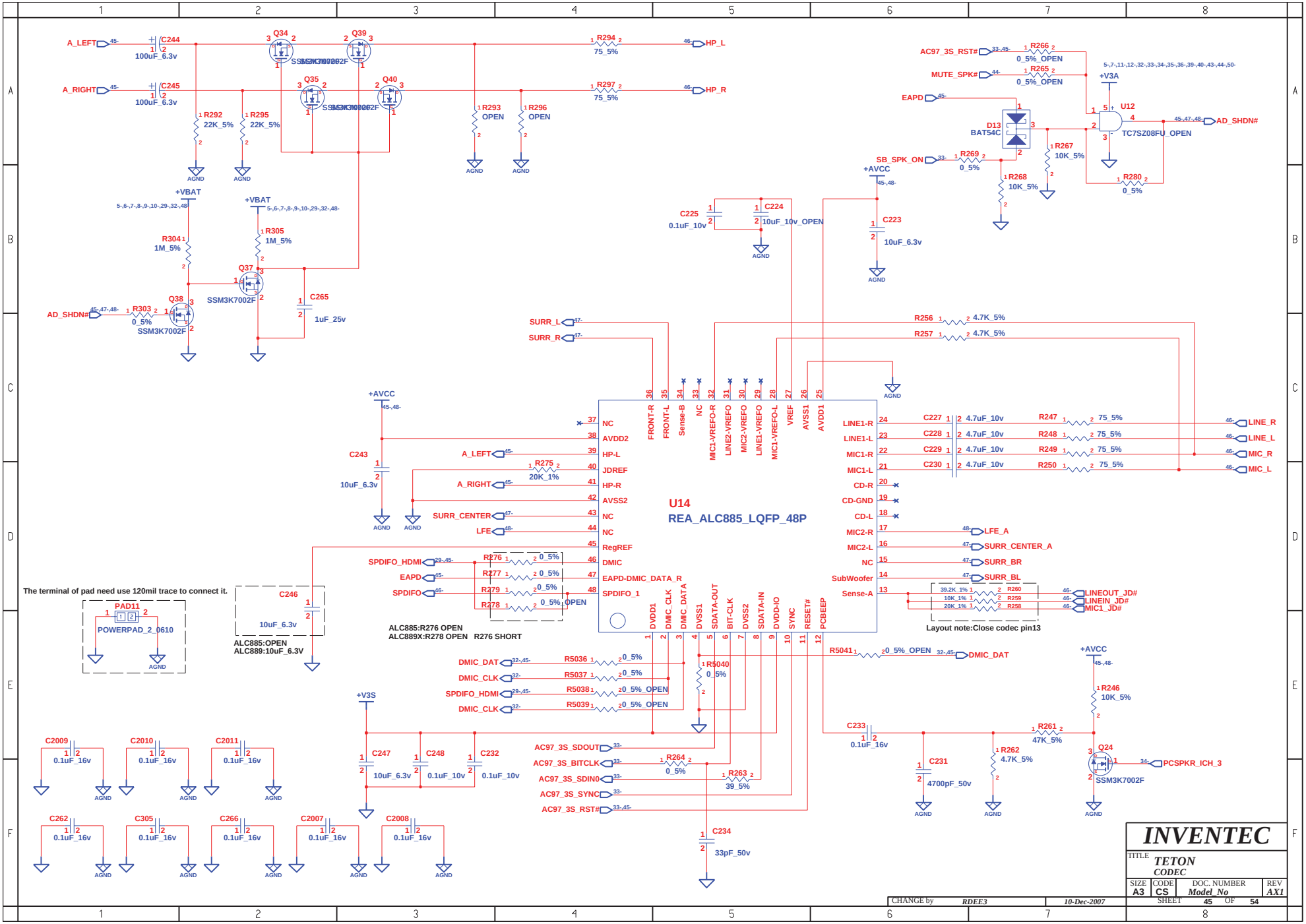
A_LEFT
A_RIGHT
C244
C245
100uF_6.3v
Q34
Q39
Q35
Q40
SSM3K7002F
R294
R297
75_5%
HP_L
HP_R
R292
R295
22K_5%
R293
R296
OPEN
AGND
+VBAT
R304
1M_5%
R305
Q37
Q38
R303
0_5%
AD_SHDN#
C265
1uF_25v
SURR_L
SURR_R
R256
R257
4.7K_5%
+AVCC
C225
0.1uF_10v
C224
10uF_10v_OPEN
C223
10uF_6.3v
AC97_3S_RST#
R266
0_5%_OPEN
MUTE_SPK#
R265
+V3A
EAPD
D13
BAT54C
U12
TC7SZ08FU_OPEN
R267
10K_5%
SB_SPK_ON
R269
R268
R280
C243
10uF_6.3v
R275
20K_1%
A_LEFT
A_RIGHT
SURR_CENTER
LFE
SPDIFO_HDMI
SPDIFO
R276
R277
R279
R278
0_5%
OPEN
U14
REA_ALC885_LQFP_48P
NC
AVDD2
HP-L
JDREF
HP-R
AVSS2
RegREF
DMIC
EAPD-DMIC_DATA_R
SPDIFO_1
FRONT-R
FRONT-L
Sense-B
MIC1-VREFO-R
LINE2-VREFO
MIC2-VREFO
LINE1-VREFO
MIC1-VREFO-L
VREF
AVSS1
AVDD1
LINE1-R
LINE1-L
MIC1-R
MIC1-L
CD-R
CD-GND
CD-L
MIC2-R
MIC2-L
SubWoofer
Sense-A
DVDD1
DMIC_CLK
DMIC_DATA
DVSS1
SDATA-OUT
BIT-CLK
DVSS2
SDATA-IN
DVDD-IO
SYNC
RESET#
PCBEEP
C227
C228
C229
C230
4.7uF_10v
R247
R248
R249
R250
75_5%
LINE_R
LINE_L
MIC_R
MIC_L
LFE_A
SURR_CENTER_A
SURR_BR
SURR_BL
R260
R259
R258
LINEOUT_JD#
LINEIN_JD#
MIC1_JD#
Layout note:Close codec pin13
ALC885:R276 OPEN
ALC889X:R278 OPEN R276 SHORT
The terminal of pad need use 120mil trace to connect it.
PAD11
POWERPAD_2_0610
C246
10uF_6.3v
ALC885:OPEN
ALC889:10uF_6.3V
DMIC_DAT
DMIC_CLK
SPDIFO_HDMI
R5036
R5037
R5038
R5039
R5040
R5041
R246
10K_5%
+V3S
C247
C248
C232
0.1uF_10v
AC97_3S_SDOUT
AC97_3S_BITCLK
AC97_3S_SDIN0
AC97_3S_SYNC
AC97_3S_RST#
R264
R263
39_5%
C234
33pF_50v
C233
0.1uF_16v
R261
47K_5%
C231
4700pF_50v
R262
4.7K_5%
Q24
PCSPKR_ICH_3
C2009
C2010
C2011
C262
C305
C266
C2007
C2008
INVENTEC
TITLE
TETON
CODEC
SIZE
A3
CODE
CS
DOC. NUMBER
Model_No
REV
AX1
SHEET
45
OF
54
CHANGE by
RDEE3
10-Dec-2007

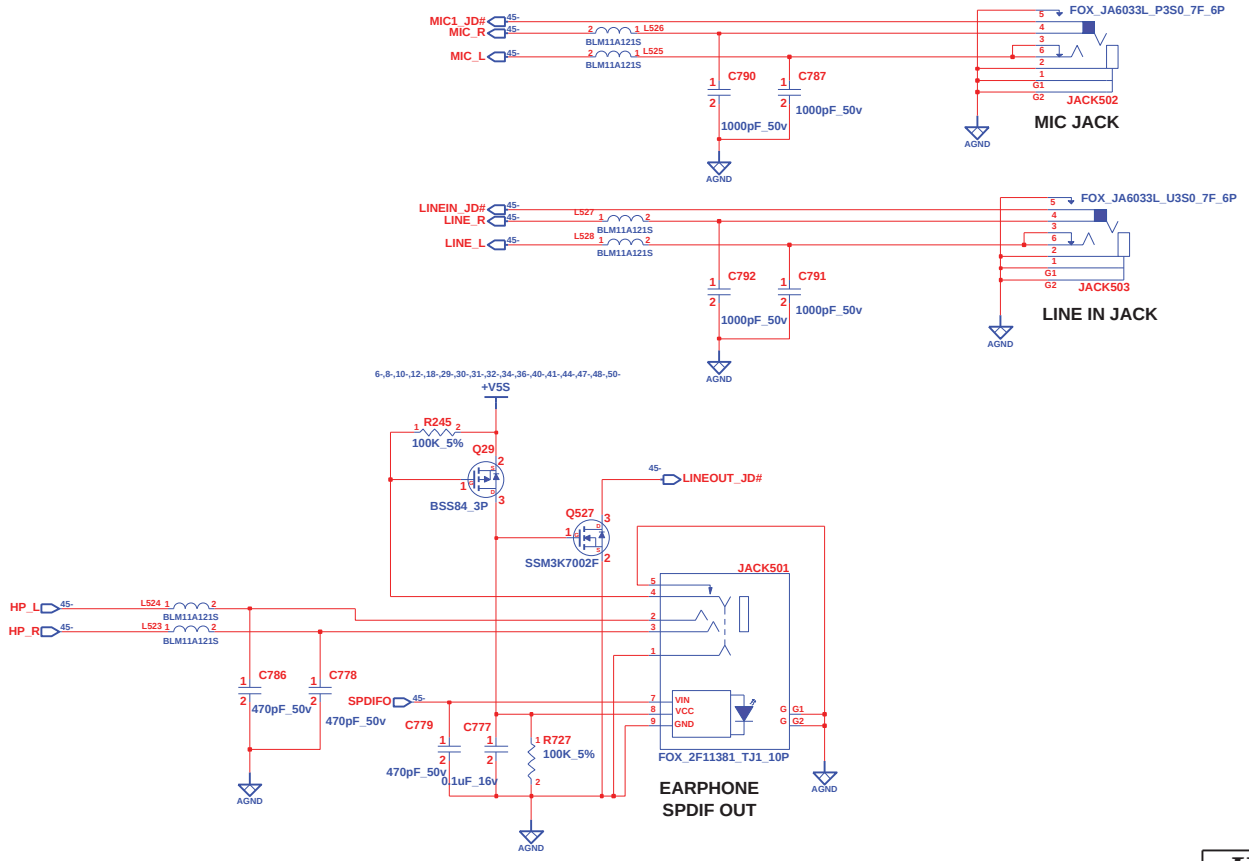

INVENTEC			
TITLE TETON			
SIZE A3	CODE CS	DOC. NUMBER Model_No	REV AX1
CHANGE by RDEE3	10-Dec-2007	SHEET 46 OF 54	

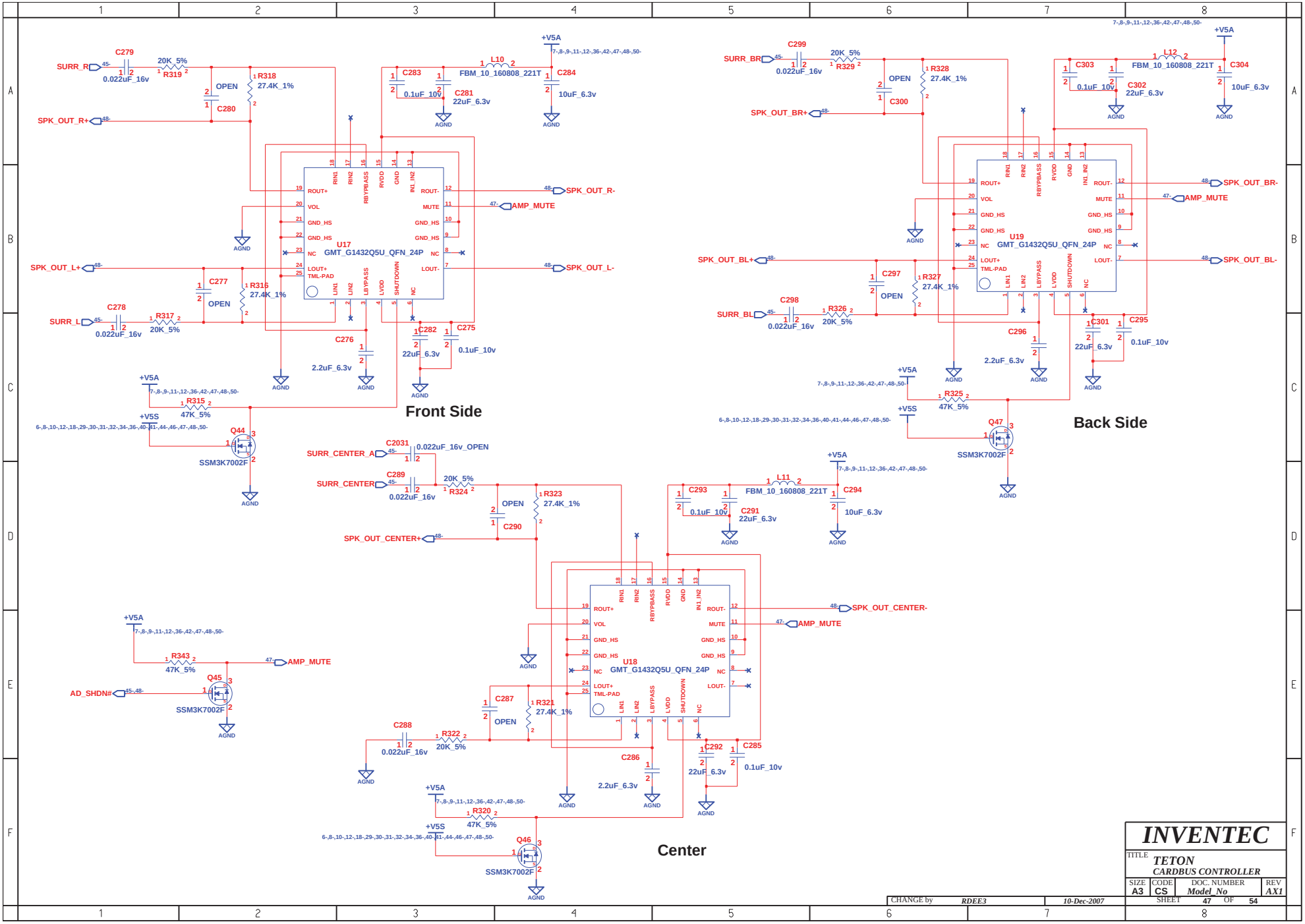
Front Side
Back Side
Center
U17 GMT_G1432Q5U_QFN_24P
U19 GMT_G1432Q5U_QFN_24P
U18 GMT_G1432Q5U_QFN_24P
SURR_R
SURR_L
SPK_OUT_R+
SPK_OUT_L+
SPK_OUT_R-
SPK_OUT_L-
AMP_MUTE
SURR_BR
SURR_BL
SPK_OUT_BR+
SPK_OUT_BL+
SPK_OUT_BR-
SPK_OUT_BL-
SURR_CENTER_A
SURR_CENTER
SPK_OUT_CENTER+
SPK_OUT_CENTER-
AD_SHDN#
SSM3K7002F
FBM_10_160808_221T
+V5A
+V5S
AGND
INVENTEC
TITLE TETON
CARDBUS CONTROLLER
SIZE A3
CODE CS
DOC. NUMBER Model_No
REV AX1
SHEET 47 OF 54
CHANGE by RDEE3
10-Dec-2007

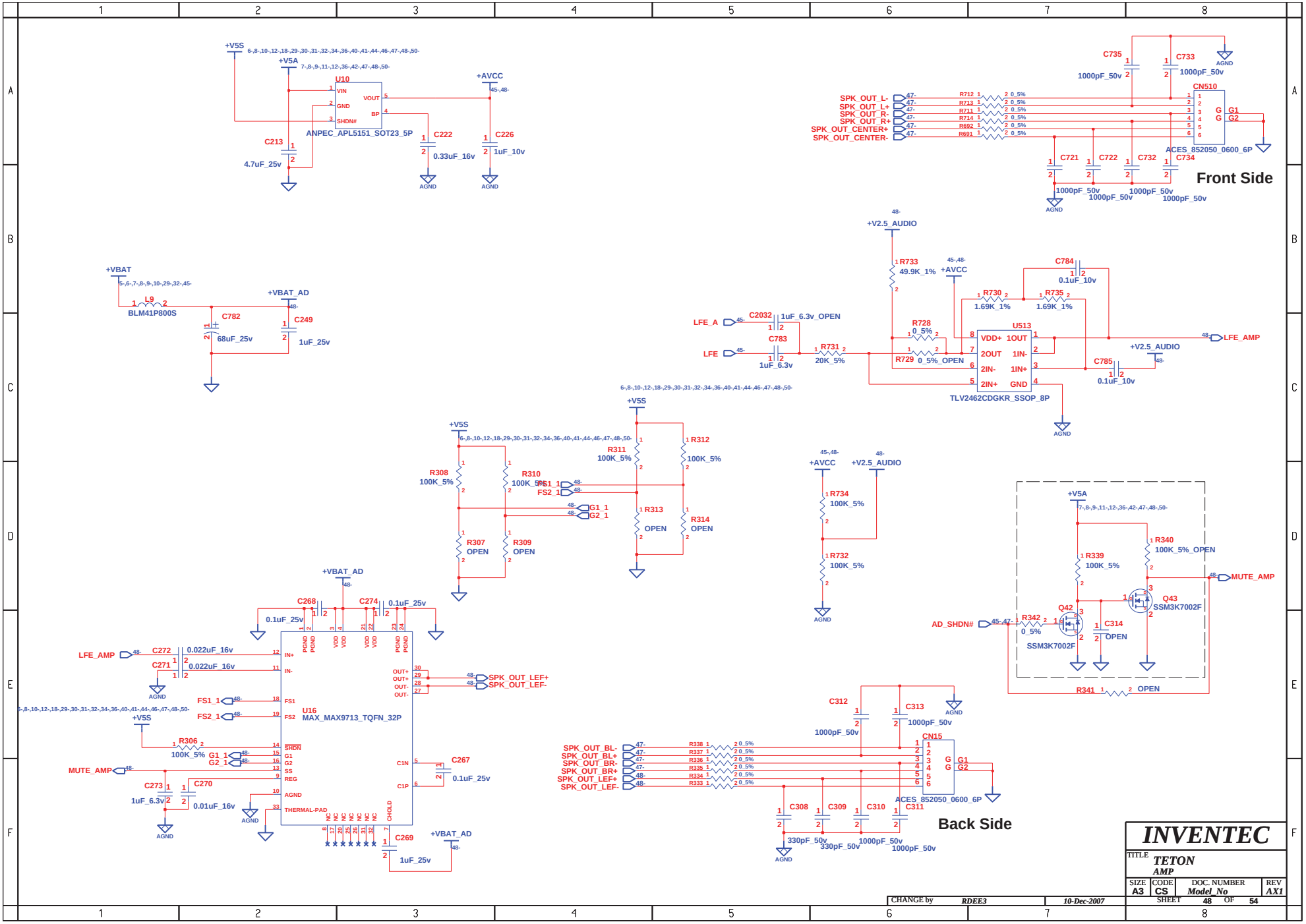
+V5S
+V5A
U10
VIN
GND
SHDN#
VOUT
BP
ANPEC_APL5151_SOT23_5P
C213
4.7uF_25v
C222
0.33uF_16v
+AVCC
C226
1uF_10v
AGND
C735
1000pF_50v
C733
1000pF_50v
CN510
SPK_OUT_L-
SPK_OUT_L+
SPK_OUT_R-
SPK_OUT_R+
SPK_OUT_CENTER+
SPK_OUT_CENTER-
R712
R713
R711
R714
R692
R691
ACES_852050_0600_6P
C721
C722
C732
C734
1000pF_50v
Front Side
+VBAT
L9
BLM41P800S
+VBAT_AD
C782
68uF_25v
C249
1uF_25v
+V2.5_AUDIO
R733
49.9K_1%
C784
0.1uF_10v
R730
1.69K_1%
R735
1.69K_1%
LFE_A
C2032
1uF_6.3v_OPEN
R728
0_5%
U513
VDD+
1OUT
2OUT
1IN-
2IN-
1IN+
2IN+
GND
LFE_AMP
LFE
C783
1uF_6.3v
R731
20K_5%
R729
0_5%_OPEN
C785
0.1uF_10v
TLV2462CDGKR_SSOP_8P
R308
100K_5%
R307
OPEN
R309
OPEN
R310
100K_5%
FS1_1
FS2_1
G1_1
G2_1
R311
100K_5%
R312
100K_5%
R313
OPEN
R314
OPEN
R734
100K_5%
R732
100K_5%
R339
100K_5%
R340
100K_5%_OPEN
MUTE_AMP
Q42
SSM3K7002F
Q43
SSM3K7002F
AD_SHDN#
R342
0_5%
C314
OPEN
R341
OPEN
C268
0.1uF_25v
C274
0.1uF_25v
C272
0.022uF_16v
C271
0.022uF_16v
U16
MAX_MAX9713_TQFN_32P
IN+
IN-
FS1
FS2
SHDN
G1
G2
SS
REG
AGND
THERMAL-PAD
OUT+
OUT-
C1N
C1P
SPK_OUT_LEF+
SPK_OUT_LEF-
R306
100K_5%
C273
1uF_6.3v
C270
0.01uF_16v
C267
0.1uF_25v
C269
1uF_25v
C312
1000pF_50v
C313
1000pF_50v
CN15
SPK_OUT_BL-
SPK_OUT_BL+
SPK_OUT_BR-
SPK_OUT_BR+
SPK_OUT_LEF+
SPK_OUT_LEF-
R338
R337
R336
R335
R334
R333
ACES_852050_0600_6P
C308
330pF_50v
C309
330pF_50v
C310
1000pF_50v
C311
1000pF_50v
Back Side
INVENTEC
TITLE
TETON
AMP
SIZE
A3
CODE
CS
DOC. NUMBER
Model_No
REV
AX1
SHEET 48 OF 54
CHANGE by
RDEE3
10-Dec-2007

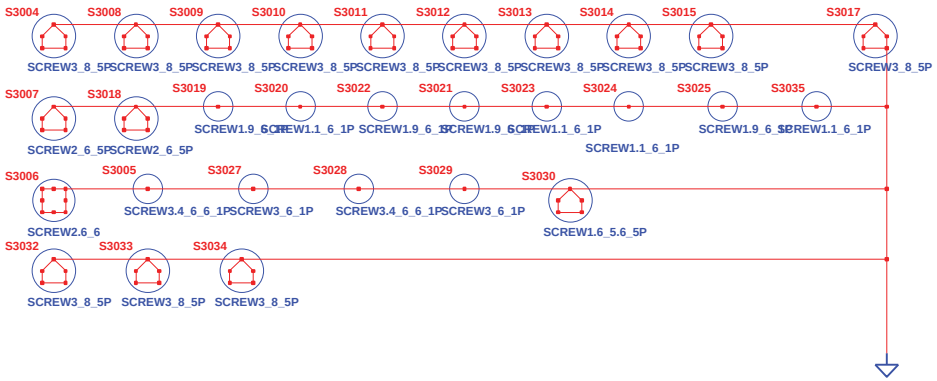

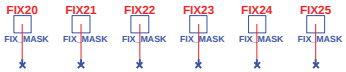

CHANGE by	RDEE3	14-Jan-2008	

INVENTEC

TITLE **TETON**
SCREW&EMC SOLUTION

SIZE	CODE	DOC. NUMBER	REV
A3	CS	Model_No	AX1

SHEET 49 OF 54

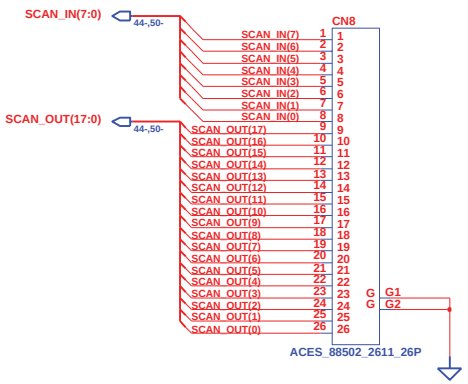

KEYBOARD CNTR

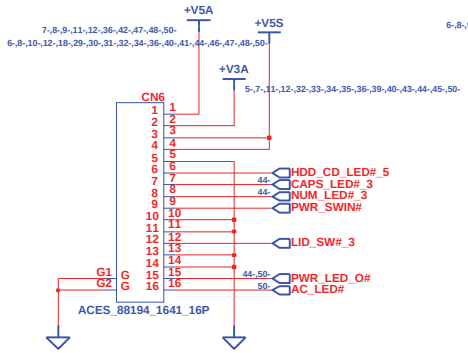

TO POWER BUTTON BOARD

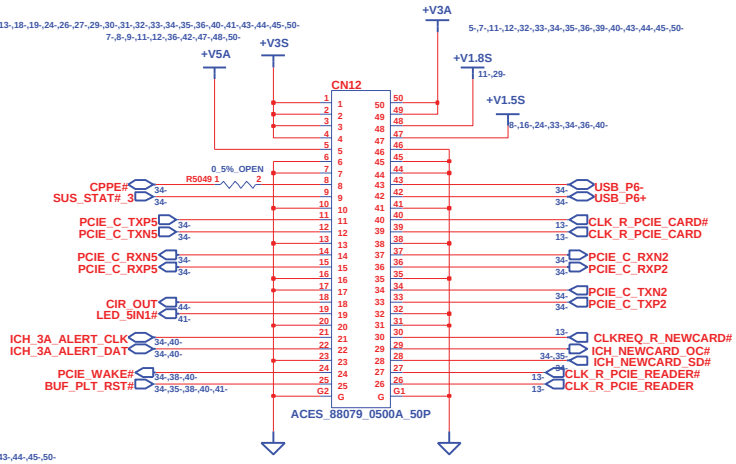

TO IO BOARD

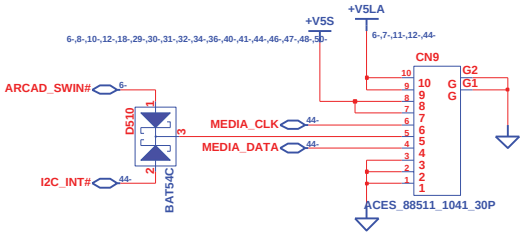

MEDIA CONSOLE CNTR

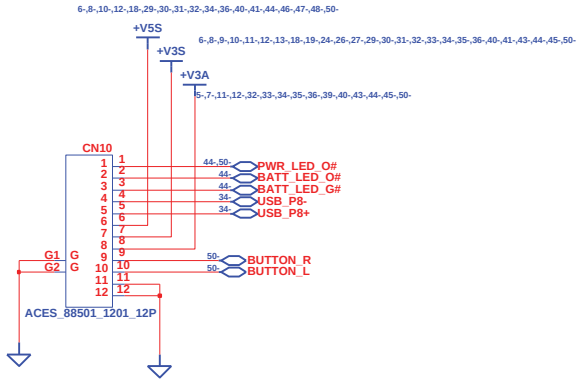

To TP BUTTON BOARD

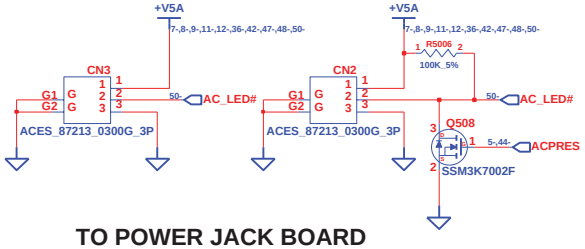

TO POWER JACK BOARD

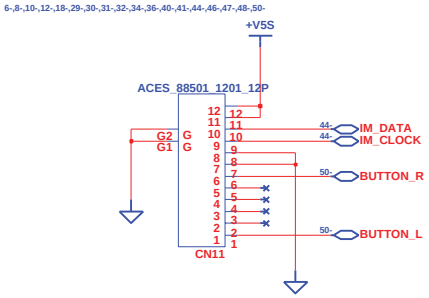

To TP

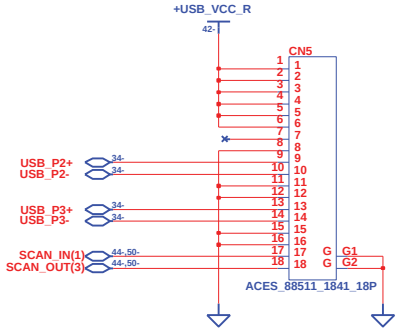

To USB BOARD

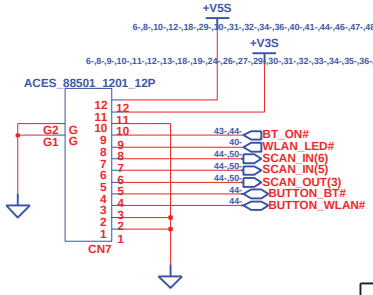

To HOTKEY BOARD BOARD

INVENTEC			
TITLE: TETON TO OTHER BOARD CONN			
SIZE A3	CODE CS	DOC. NUMBER Model_No	REV AX1
CHANGE by RDEE3	8-Jan-2008	SHEET 50 OF 54	

USB BOARD

TV ANT

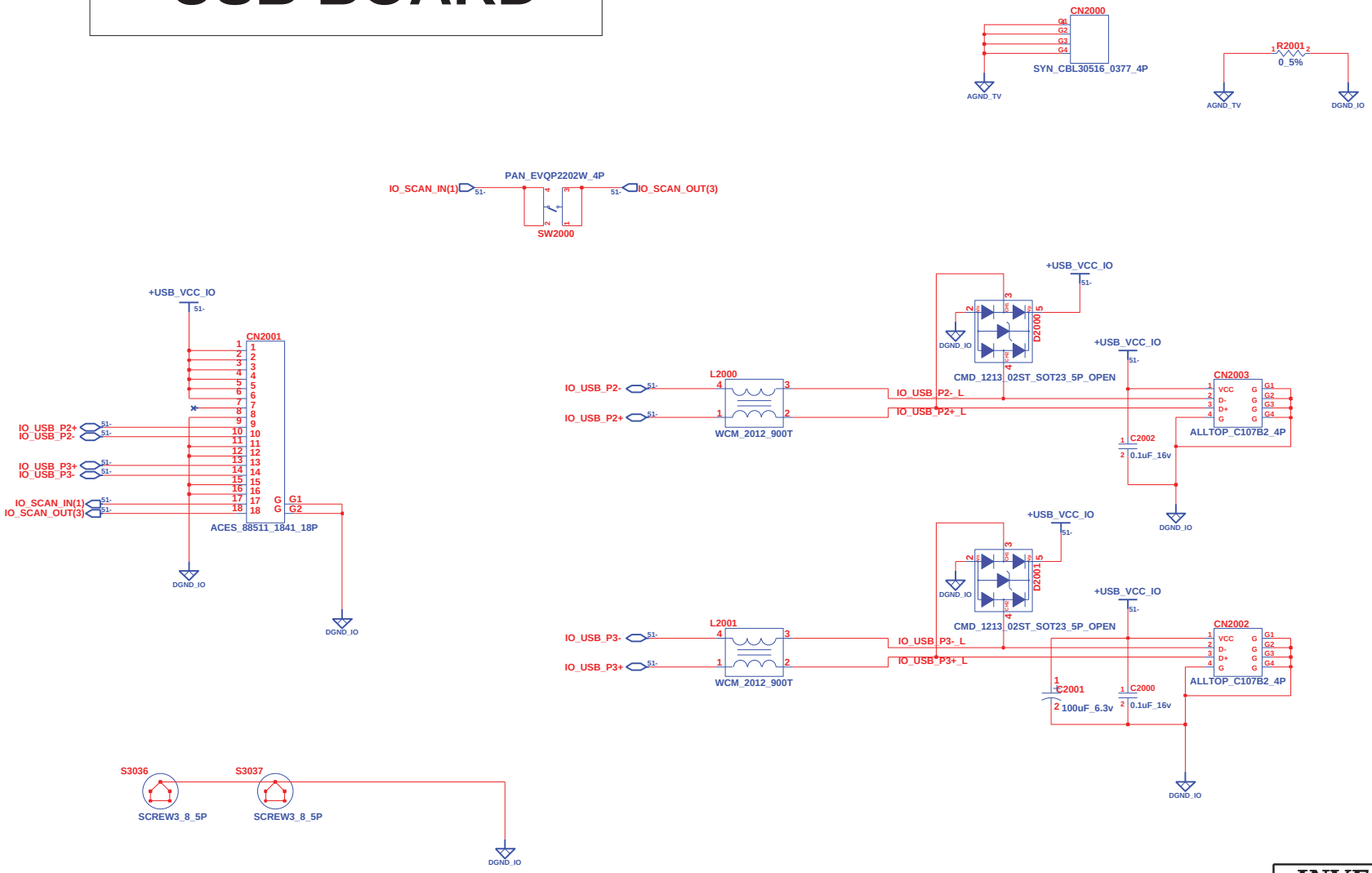

INVENTEC			
TITLE TETON USB BOARD			
SIZE A3	CODE CS	DOC. NUMBER Model_No	REV AX1
CHANGE by RDEE3	10-Dec-2007	SHEET 51 OF 54	

PowerButton Board

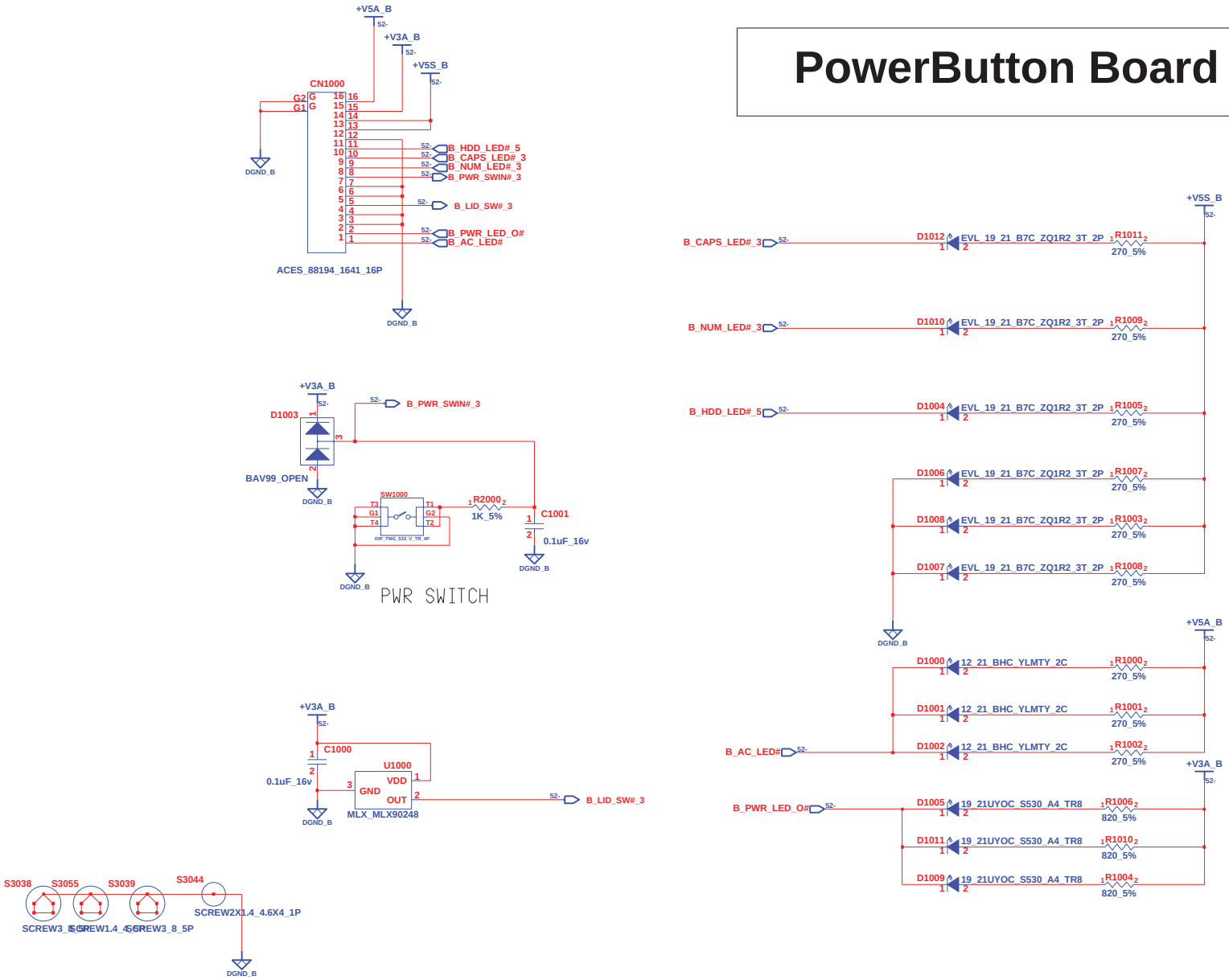

INVENTEC			
TITLE TETON POWER BUTTON BOARD			
SIZE A3	CODE CS	DOC. NUMBER Model_No	REV AX1
CHANGE by RDEE3	10-Dec-2007	SHEET 52 OF 54	

TOUCH PAD BUTTON BOARD

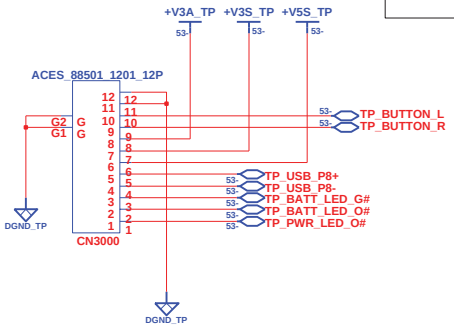

TO MB

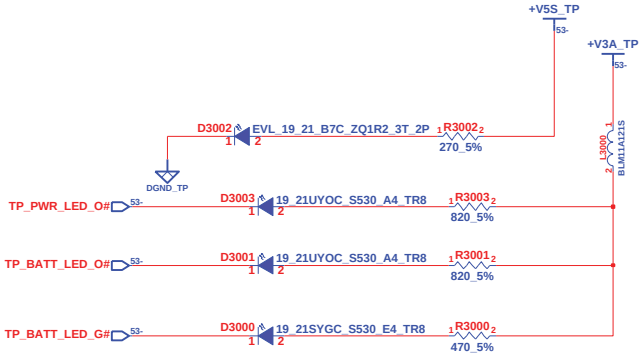

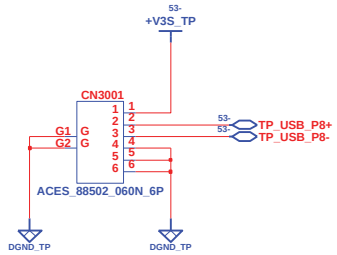

TO FINGER PRINT

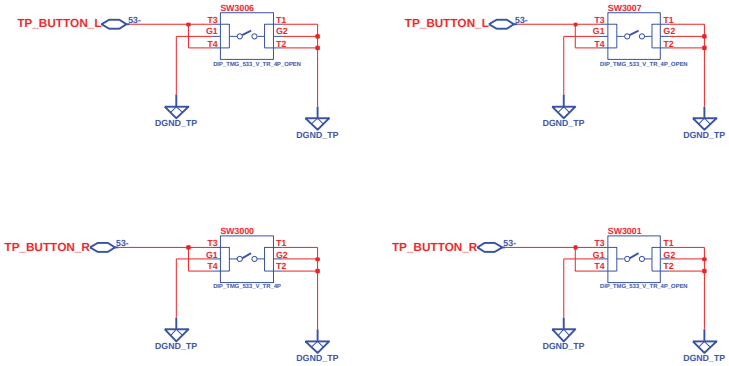

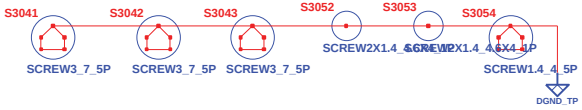

INVENTEC			
TITLE TETON TH BUTTON BOARD			
SIZE A3	CODE CS	DOC. NUMBER Model_No	REV AX1
CHANGE by RDEE3	10-Dec-2007	SHEET 53 OF 54	

HINGE LED Board 1

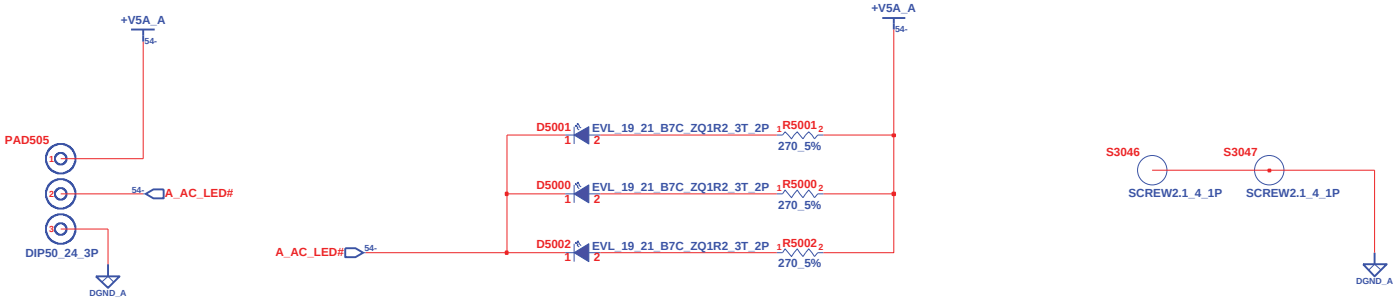

HINGE LED Board 2

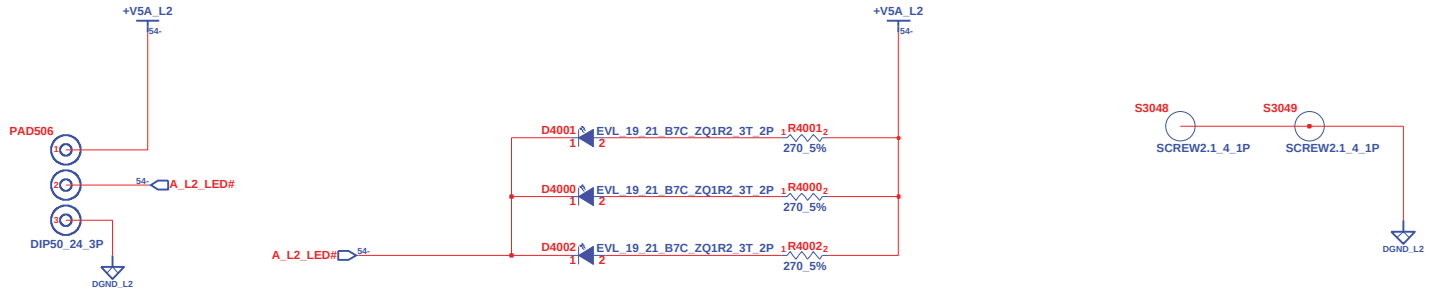

INVENTEC			
TITLE TETON PowerJack BOARD			
SIZE A3	CODE CS	DOC. NUMBER Model_No	REV AX1
CHANGE by RDEE3	10-Dec-2007	SHEET 54 OF 54	

I/O BOARD 1/2

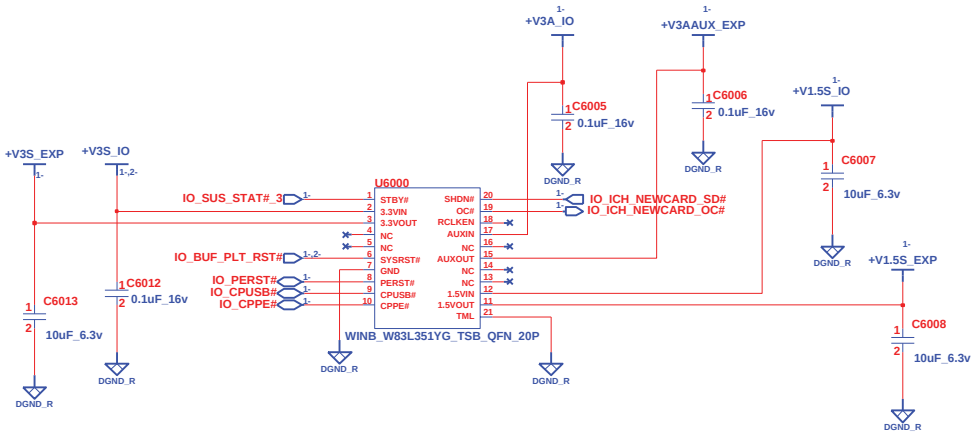

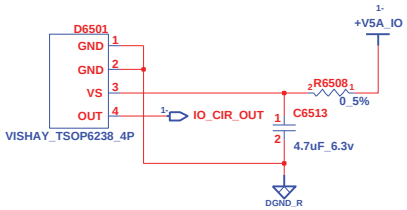

CIR

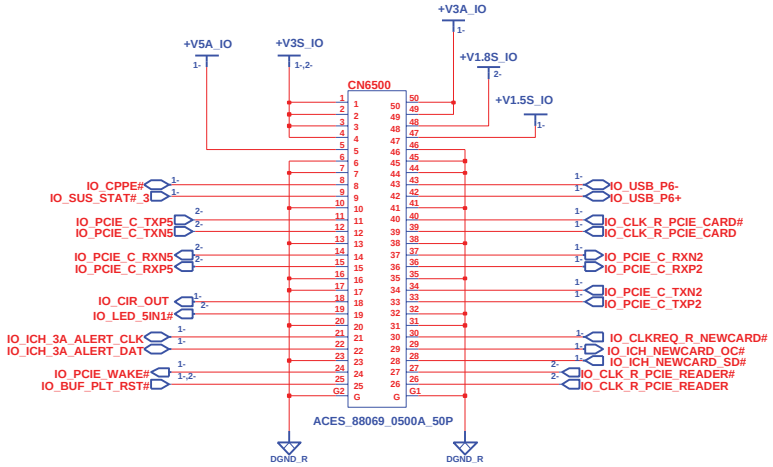

TO MB

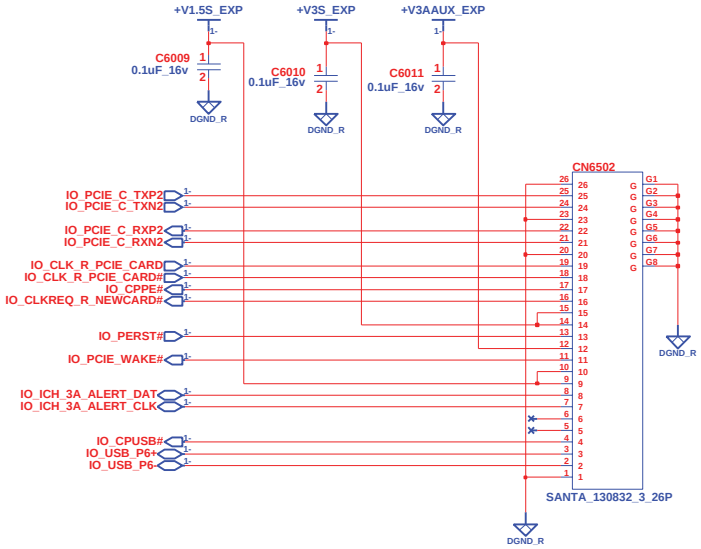

EXPRESS CARD

FIX6500 FIX6505 FIX6502 FIX6506 FIX6501 FIX6503 FIX6507 FIX6504
FIX_MASK

INVENTEC			
TITLE: TETON EXPRESS CARD & CIR			
SIZE A3	CODE CS	DOC. NUMBER Model_No	REV X01
CHANGE by RD-EE3	7-Oct-2007	SHEET 1 OF 3	

I/O BOARD 2/2

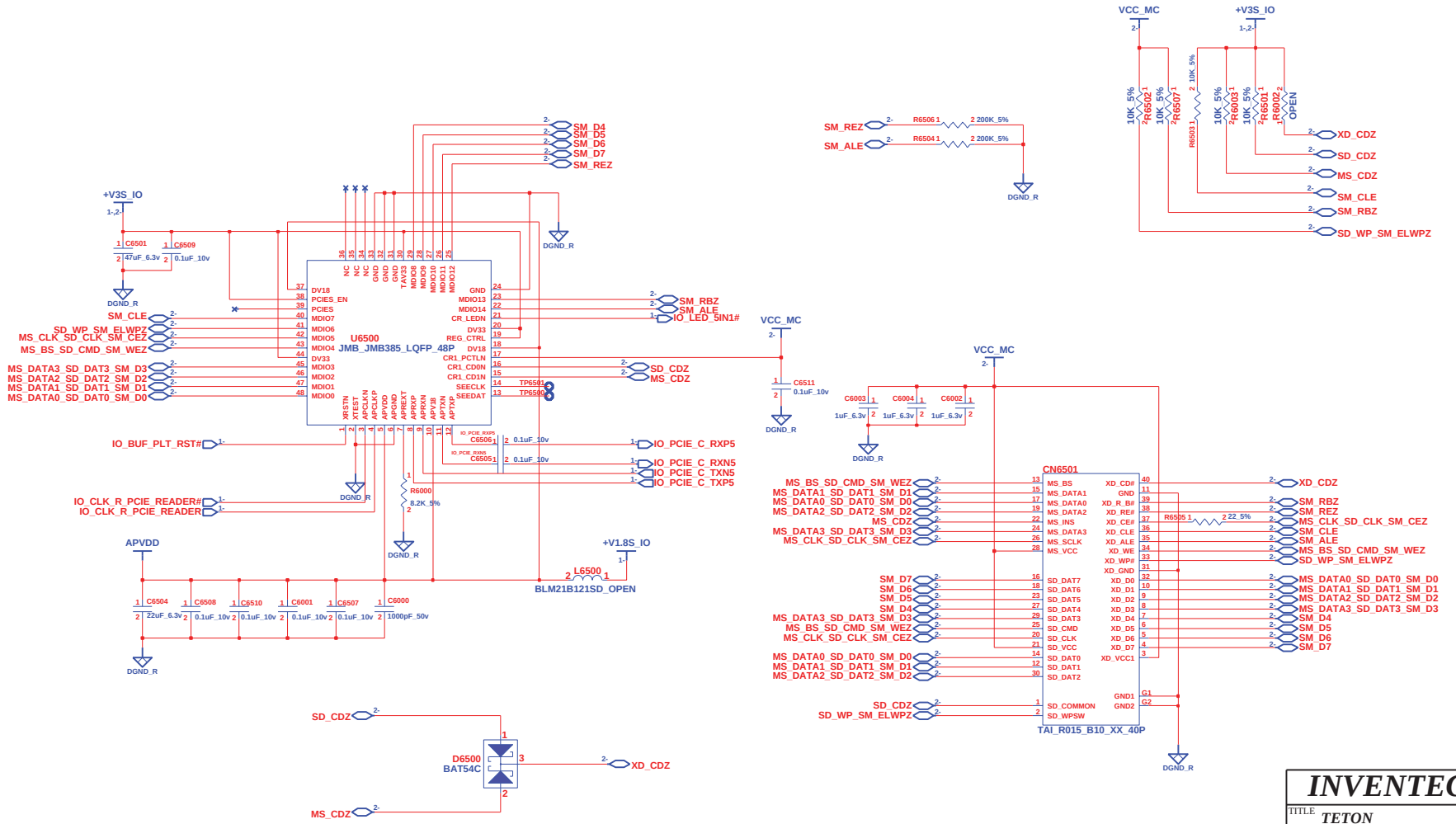

INVENTEC			
TITLE	TETON 6 IN 1 CARD CONN		
SIZE A3	CODE CS	DOC. NUMBER Model_No	REV X01
CHANGE by RD-EE3	7-Oct-2007	SHEET 2 OF 3	

Hotkey Board

(BLUE TOOTH LED)

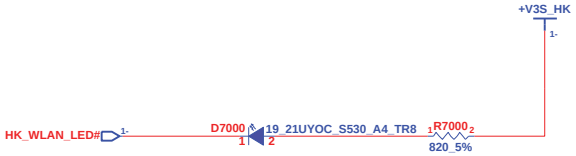

(WLAN LED)

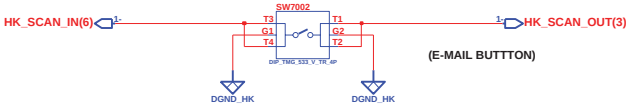

(E-MAIL BUTTTON)

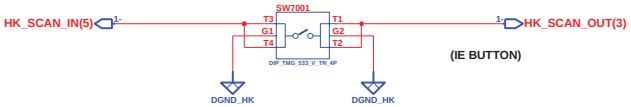

(IE BUTTON)

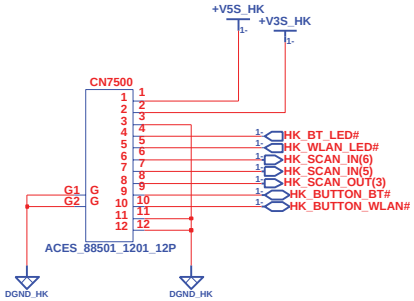

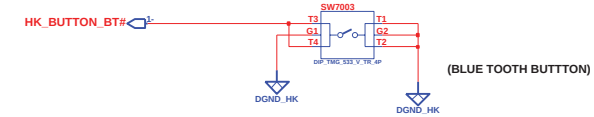

(BLUE TOOTH BUTTTON)

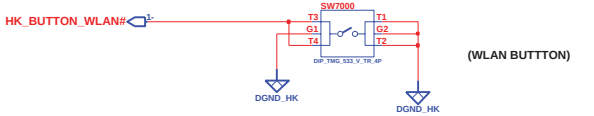

(WLAN BUTTTON)

TO MB PAGE50

INVENTEC			
TITLE TETON HOTKEY BOARD			
SIZE A3	CODE CS	DOC. NUMBER Model_No	REV X01
CHANGE by RD-EE3	7-Oct-2007	SHEET 1 OF 1	